REV	DESCRIPTION	DESIGN	DATE
A	NEW RELEASE	Lingqing	2020/12/03

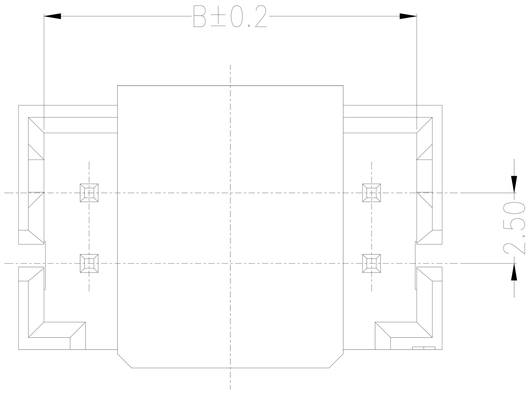

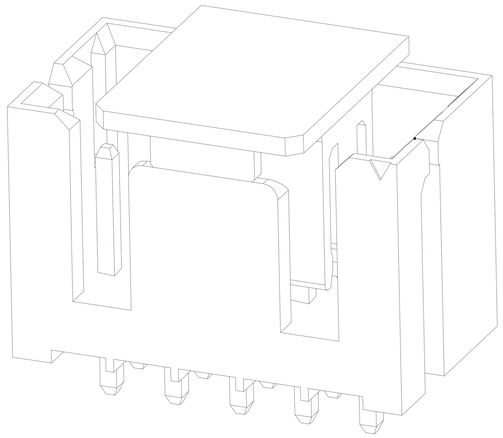

Specifications:

Contact resistance:≤30mΩ
Insulation resistance:≥1000MΩ
Rated voltage:250V AC DC
Rated current:3.0A AC DC
Withstand Voltage: 800V AC/minute
Temperature Range:-25°C~ +85°C
Housing: LCP UL94V-0, Natural
Contacts: Brass Sn-plated

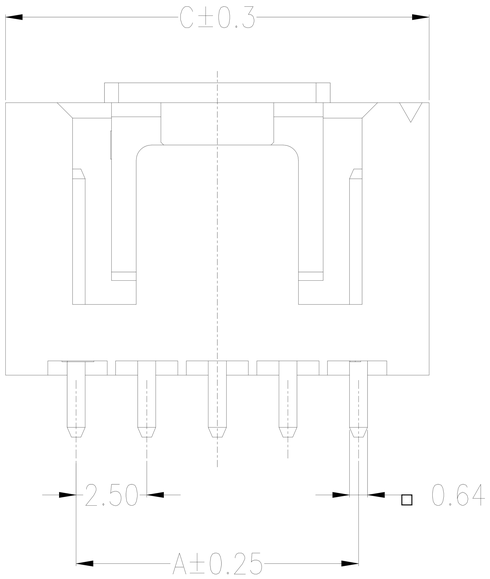

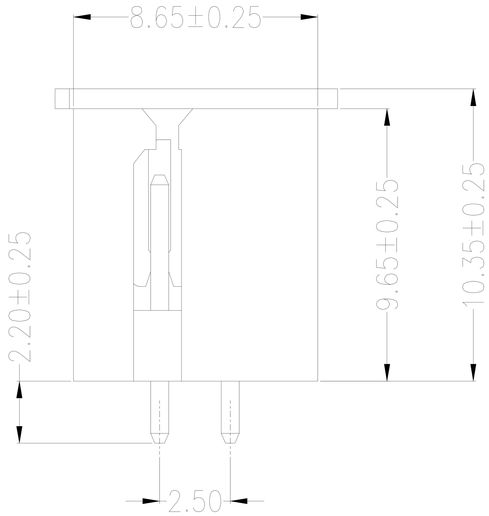

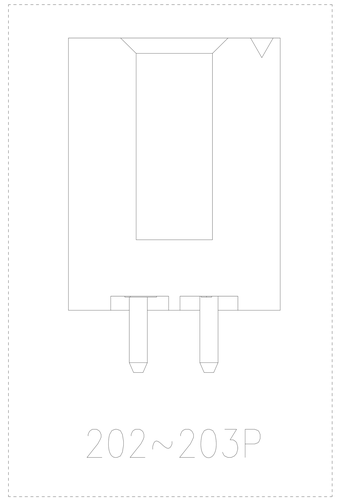

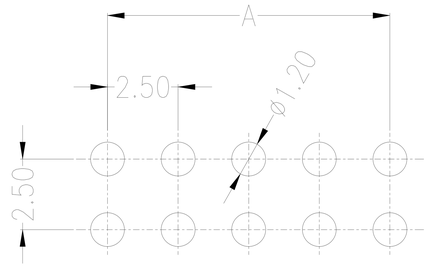

RECOMMENGED PCB LAYOUT(TOP VIEW)

TOLERANCE:±0.05mm

Circuits	Dimensions(mm)		
	A	B	C
202(2X2)	2.50	5.70	7.50
203(2X3)	5.00	8.20	10.00
204(2X4)	7.50	10.70	12.50
205(2X5)	10.00	13.20	15.00
206(2X6)	12.50	15.70	17.50
207(2X7)	15.00	18.20	20.00
208(2X8)	17.50	20.70	22.50
209(2X9)	20.00	23.20	25.00
210(2X10)	22.50	25.70	27.50
211(2X11)	25.00	28.20	30.00
212(2X12)	27.50	30.70	32.50

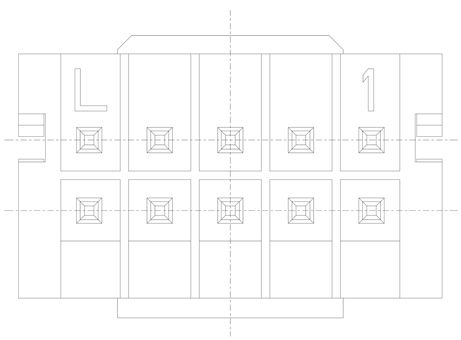

紅焱電子有限公司

GENERAL TOLERANCE			
X.	±0.50	X.	±5°
X.X	±0.30	X.X	±2°
X.XX	±0.20	X.XX	±1°
		UNITS:	mm

USE: CUSTOMER
APPD: Shaojinghe
CHKD: Fangsongle
DR: Zenglingqing

TITLE: 2.5mm pitch 180°Wafe DIP type

PART NO.: T2508A-2XNP

DWG NO.:

SCALE 1 : 1

SHEET 1 / 1

REV	DESCRIPTION	DESIGN	DATE
A	NEW RELEASE	Lingqing	2020/12/03

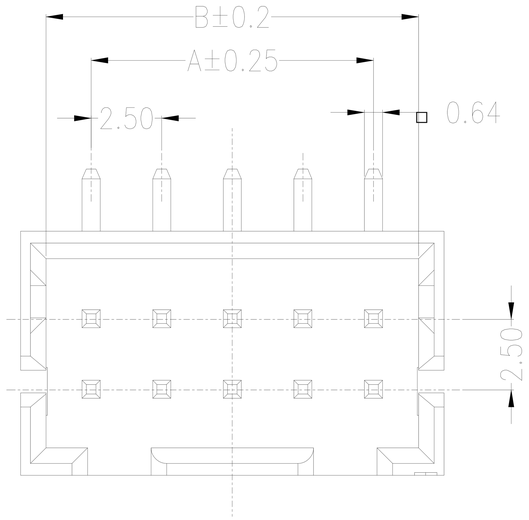

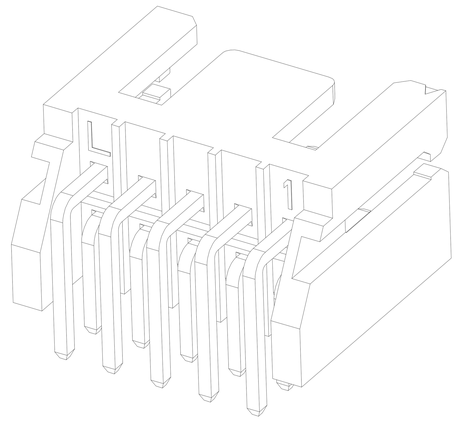

Specifications:

Contact resistance:≤30mΩ
Insulation resistance:≥1000MΩ
Rated voltage:250V AC DC
Rated current:3.0A AC DC
Withstand Voltage: 800V AC/minute
Temperature Range:-25°C~ +85°C
Housing: LCP UL94V-0, Natural
Contacts: Brass Sn-plated

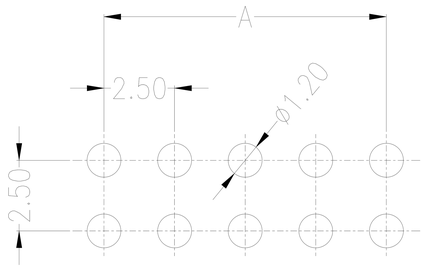

RECOMMENGED PCB LAYOUT(TOP VIEW)
TOLERANCE:±0.05mm

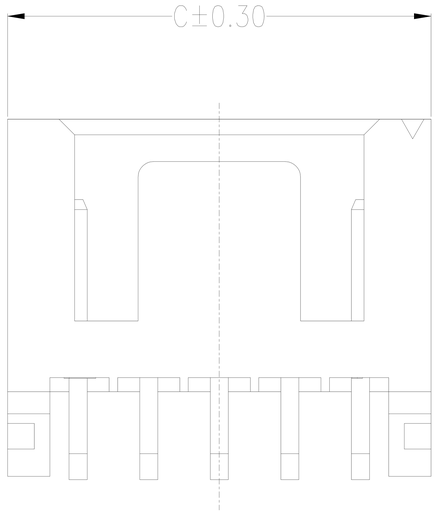

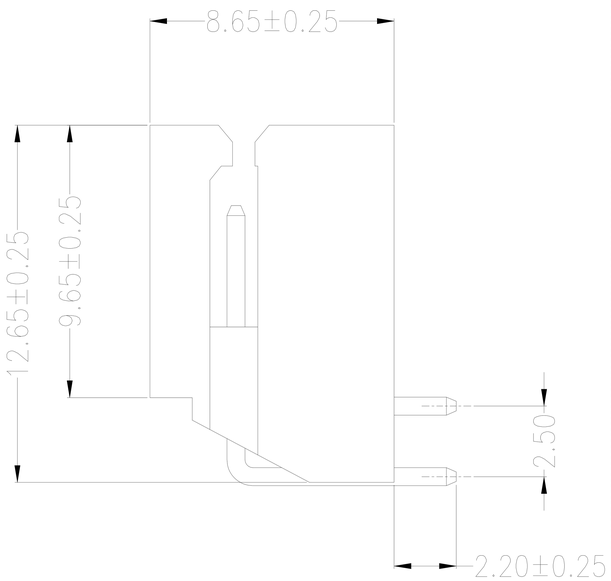

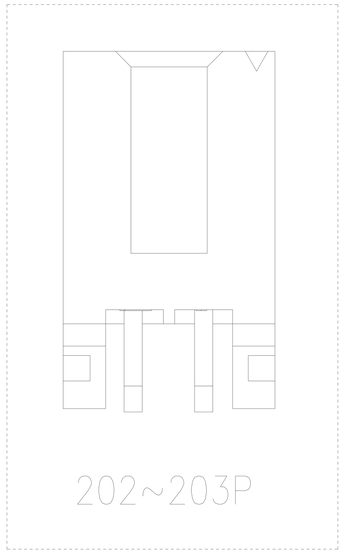

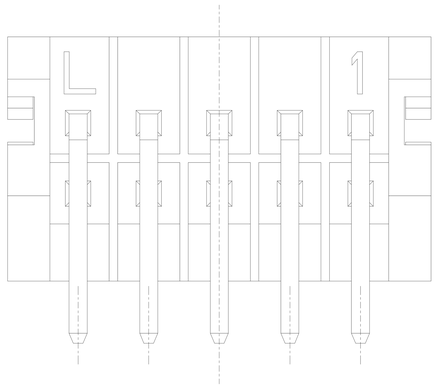

Circuits	Dimensions(mm)		
	A	B	C
202(2X2)	2.50	5.70	7.50
203(2X3)	5.00	8.20	10.00
204(2X4)	7.50	10.70	12.50
205(2X5)	10.00	13.20	15.00
206(2X6)	12.50	15.70	17.50
207(2X7)	15.00	18.20	20.00
208(2X8)	17.50	20.70	22.50
209(2X9)	20.00	23.20	25.00
210(2X10)	22.50	25.70	27.50
211(2X11)	25.00	28.20	30.00
212(2X12)	27.50	30.70	32.50

紅焱電子有限公司

GENERAL TOLERANCE			
X.	±0.50	X.	±5°
X.X	±0.30	X.X	±2°
X.XX	±0.20	X.XX	±1°
		UNITS:	mm

USE: CUSTOMER
APPD: Shaojinghe
CHKD: Fangsongle
DR: Zenglingqing

TITLE: 2.5mm pitch 90°Wafe DIP type
PART NO.: T2508AWD-2XNP
DWG NO.:
SCALE 1 : 1
SHEET 1 / 1