REV	DESCRIPTION	DESIGN	DATE
A0	NEW RELEASE	Lingqing	2019/11/06

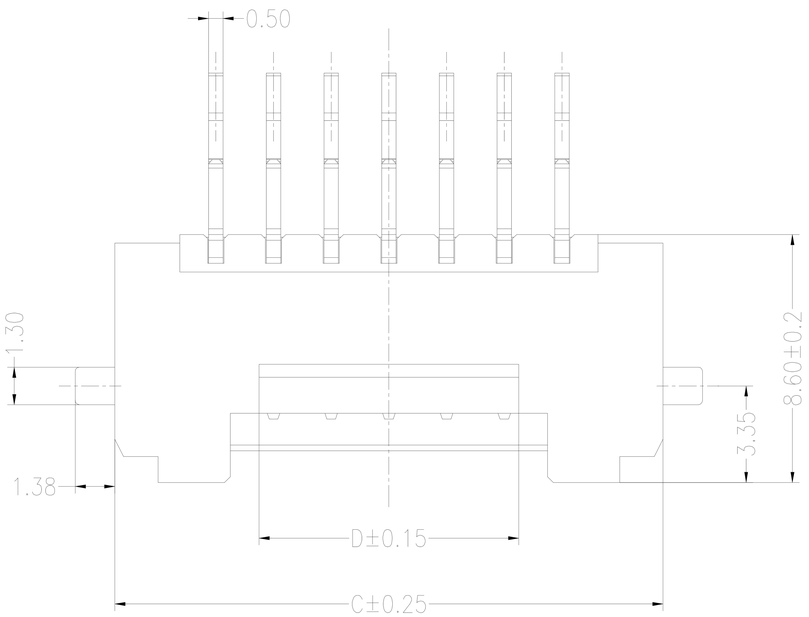

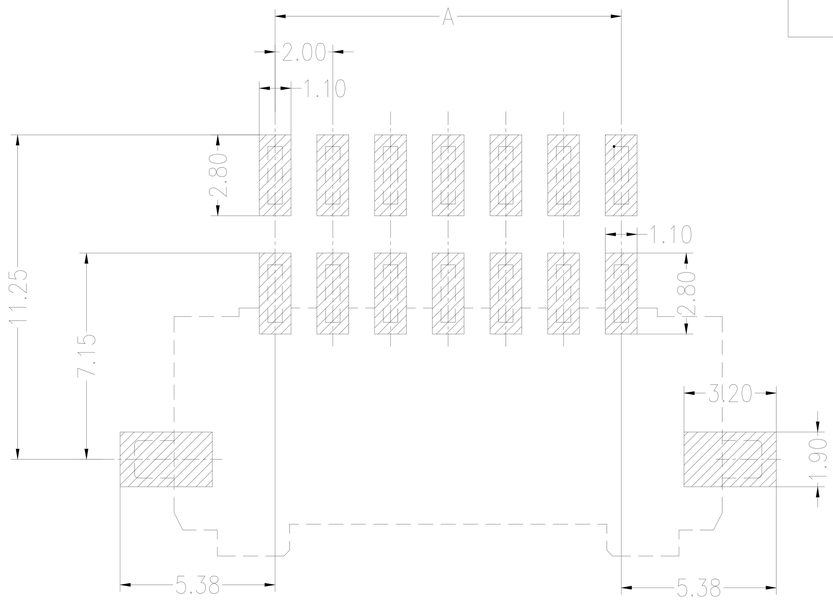

PCB LAYOUT(Tolerance:±0.05)

Specifications:

Contact resistance:≤30mΩ
Insulation resistance:≥1000MΩ
Rated voltage:250V AC DC
Rated current:3.0A AC DC
Withstand Voltage: 1000V AC/minute
Temperature Range:-25℃~+85℃
Housing:LCP UL94V-0,BEIGE
Contacts:Brass/MATTE Sn-plated
Solder Tabs:Brass/MATTE Sn-plated

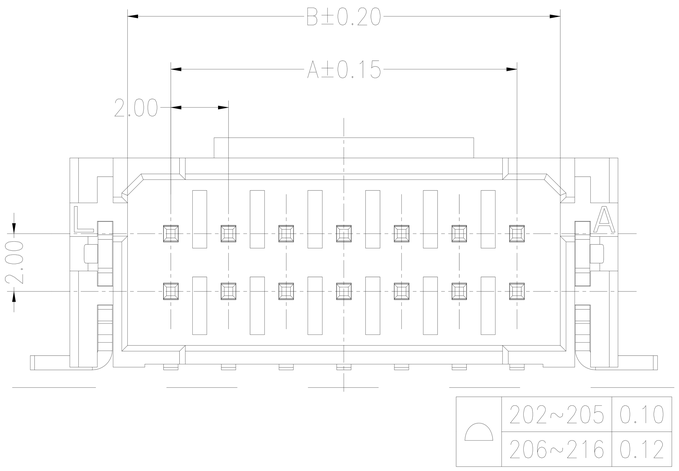

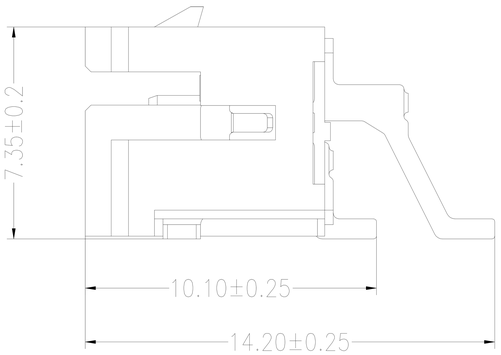

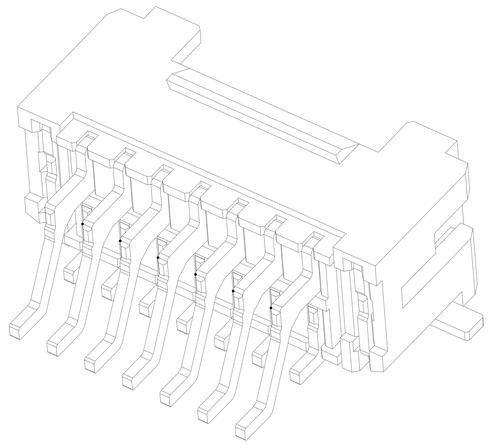

Circuits	Dimensions(mm)			
	A	B	C	D
202(2X2)	2.00	5.00	9.00	3.00
203(2X3)	4.00	7.00	11.00	3.00
204(2X4)	6.00	9.00	13.00	3.00
205(2X5)	8.00	11.00	15.00	5.00
206(2X6)	10.00	13.00	17.00	7.00
207(2X7)	12.00	15.00	19.00	9.00
208(2X8)	14.00	17.00	21.00	11.00
209(2X9)	16.00	19.00	23.00	13.00
210(2X10)	18.00	21.00	25.00	15.00
211(2X11)	20.00	23.00	27.00	17.00
212(2X12)	22.00	25.00	29.00	19.00
*213(2X13)	24.00	27.00	31.00	21.00
214(2X14)	26.00	29.00	33.00	23.00
215(2X15)	28.00	31.00	35.00	25.00
*216(2X16)	30.00	33.00	37.00	27.00

紅焱電子有限公司

GENERAL TOLERANCE	
X. ±0.50	X. ±5°
X.X ±0.30	X.X ±2°
X.XX ±0.20	X.XX ±1°
	UNITS: mm

USE: CUSTOMER
APPD: Liuzhengling
CHKD: Steven
DR: Zenglingqing

TITLE: 2.0 Pitch Wafer 90° SMT
PART NO.: A2004AWR-2XNP
DWG NO.:
SCALE 1 : 1
SHEET 1 / 1