| REV | DESCRIPTION | DESIGN | DATE |
|---|---|---|---|
| A0 | NEW RELEASE | FangSongLe | 2020/08/07 |
| | | | |

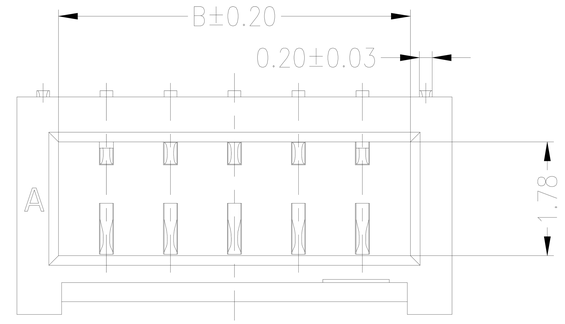


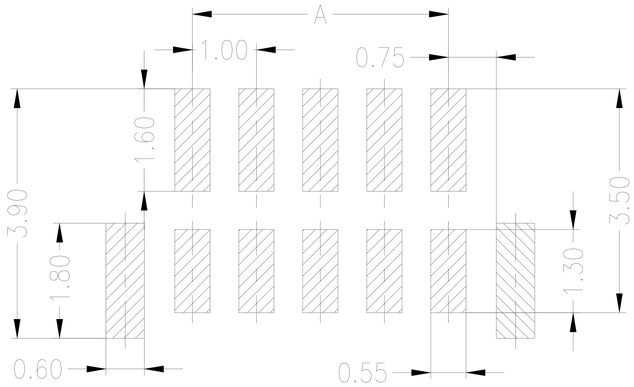


PCB LAYOUT(Tolerance:±0.05)

Specifications:
- Poles: 02 to 20
- Contact resistance:≤20mΩ
- Insulation resistance:⩾100MΩ
- Rated voltage:125V AC DC
- Rated current:1.0A AC DC
- Withstand Voltage: 500V AC/minute
- Temperature Range:-25℃~ +85℃
- Housing:PA6T UL94V-0,Natural
- Cap:PA6T UL94V-0,Natural
- Contacts:PhosphorBronze/Matte Sn-plated
- Solder tabs:PhosphorBronze/Matte Sn-plated

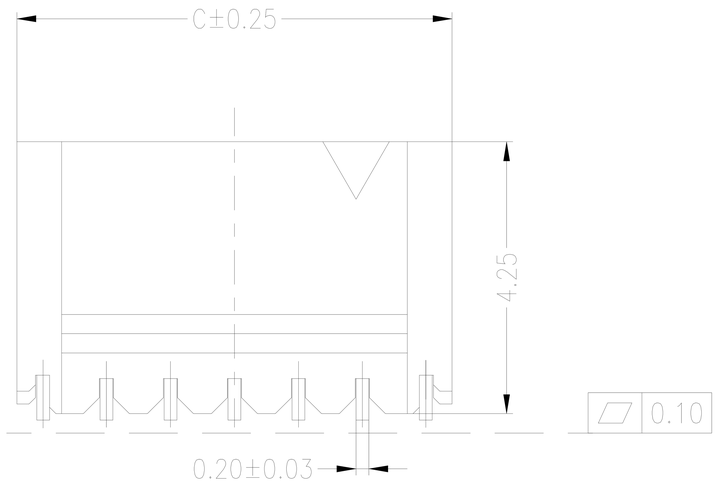


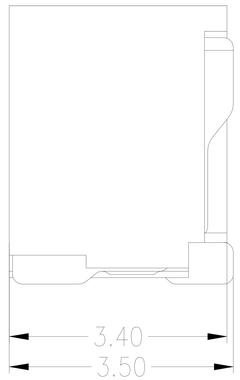


WITH CAP
SCALE:1/2

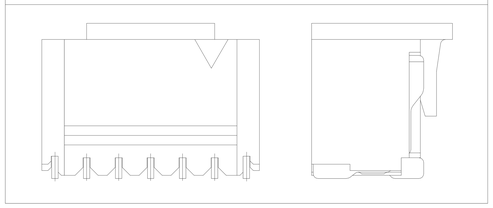

| PIN | DIM A | DIM B | DIM C | PIN | DIM A | DIM B | DIM C |
|---|---|---|---|---|---|---|---|
| 2P | 1.00 | 2.50 | 3.80 | 12P | 11.00 | 12.5 | 13.8 |
| 3P | 2.00 | 3.50 | 4.80 | *13P | 12.00 | 13.5 | 14.8 |
| 4P | 3.00 | 4.50 | 5.80 | 14P | 13.00 | 14.5 | 15.8 |
| 5P | 4.00 | 5.50 | 6.80 | *15P | 14.00 | 15.5 | 16.8 |
| 6P | 5.00 | 6.50 | 7.80 | *16P | 15.00 | 16.5 | 17.8 |
| *7P | 6.00 | 7.50 | 8.80 | *17P | 16.00 | 17.5 | 18.8 |
| 8P | 7.00 | 8.50 | 9.80 | *18P | 17.00 | 18.5 | 19.8 |
| *9P | 8.00 | 9.50 | 10.8 | *19P | 18.00 | 19.5 | 20.8 |
| 10P | 9.00 | 10.50 | 11.8 | *20P | 19.00 | 20.5 | 21.8 |
| *11P | 10.00 | 11.50 | 12.8 | | | | |

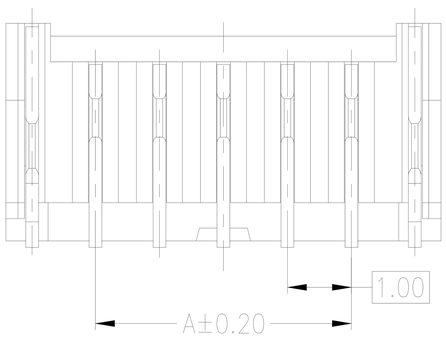


3D VIEW

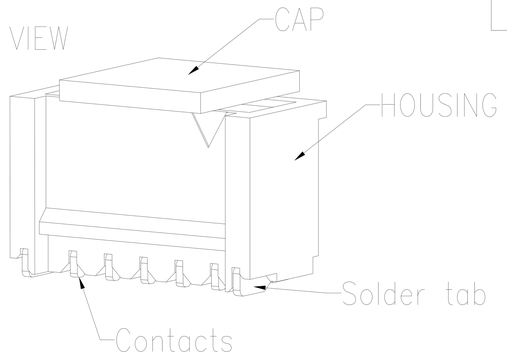


紅焱電子有限公司

| GENERAL TOLERANCE | | | |
|---|---|---|---|
| X. | ±0.50 | X. | ±5° |
| X.X | ±0.30 | X.X | ±2° |
| X.XX | ±0.20 | X.XX | ±1° |
| | | UNITS: | mm |

USE: CUSTOMER
APPD: Liuzhengling
CHKD: Steven
DR: FangSongLe

TITLE: 1.0 Pitch Wafer 180° SMT
PART NO.: A1007AWV-NP
DWG NO.:
SCALE 1 : 1
SHEET 1 / 1

| REV | DESCRIPTION | DESIGN | DATE |
|---|---|---|---|
| A | NEW RELEASE | FangSongLe | 2021/06/30 |
| | | | |

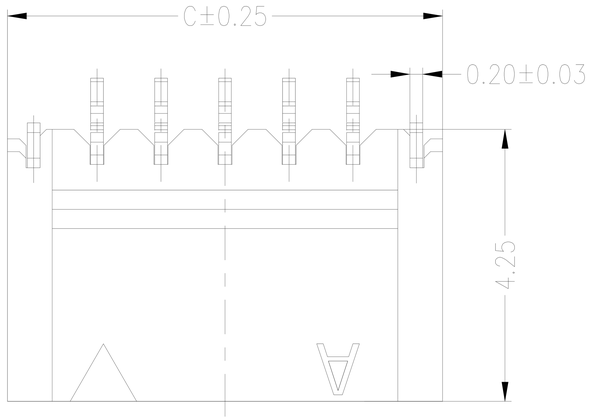


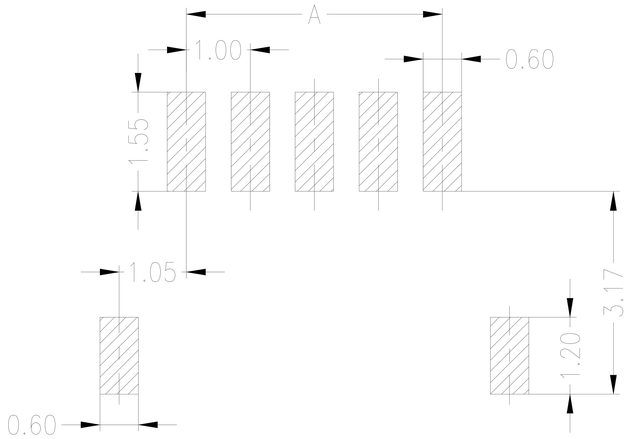


PCB LAYOUT(Tolerance:±0.05)

Specifications:
- Poles: 02 to 20
- Contact resistance:≤20mΩ
- Insulation resistance:⩾100MΩ
- Rated voltage:125V AC DC
- Rated current:1.0A AC DC
- Withstand Voltage: 500V AC/minute
- Temperature Range:-25℃~ +85℃
- Housing:PA6T UL94V-0,Natural
- Cap:PA6T UL94V-0,Natural
- Contacts:PhosphorBronze/Matte Sn-plated
- Solder tabs:PhosphorBronze/Matte Sn-plated

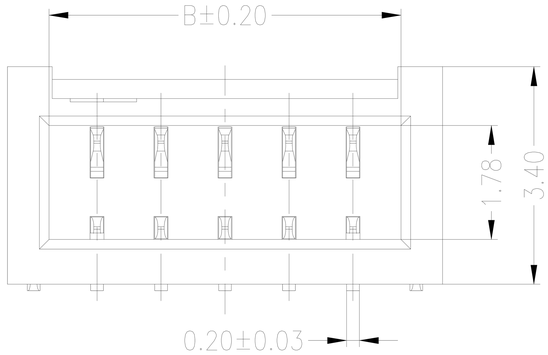


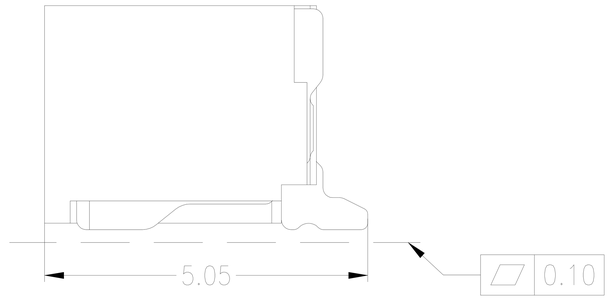


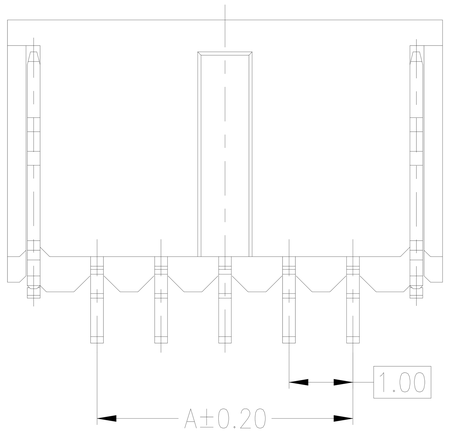


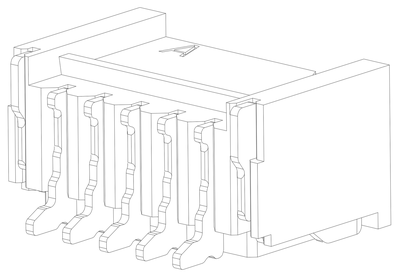

| PIN | DIM A | DIM B | DIM C | PIN | DIM A | DIM B | DIM C |
|---|---|---|---|---|---|---|---|
| 2P | 1.00 | 2.50 | 3.80 | 12P | 11.00 | 12.5 | 13.8 |
| 3P | 2.00 | 3.50 | 4.80 | 13P | 12.00 | 13.5 | 14.8 |
| 4P | 3.00 | 4.50 | 5.80 | 14P | 13.00 | 14.5 | 15.8 |
| 5P | 4.00 | 5.50 | 6.80 | 15P | 14.00 | 15.5 | 16.8 |
| 6P | 5.00 | 6.50 | 7.80 | 16P | 15.00 | 16.5 | 17.8 |
| 7P | 6.00 | 7.50 | 8.80 | 17P | 16.00 | 17.5 | 18.8 |
| 8P | 7.00 | 8.50 | 9.80 | 18P | 17.00 | 18.5 | 19.8 |
| 9P | 8.00 | 9.50 | 10.8 | 19P | 18.00 | 19.5 | 20.8 |
| 10P | 9.00 | 10.50 | 11.8 | 20P | 19.00 | 20.5 | 21.8 |
| 11P | 10.00 | 11.50 | 12.8 | | | | |

紅焱電子有限公司

| GENERAL TOLERANCE | | | |
|---|---|---|---|
| X. | ±0.50 | X. | ±5° |
| X.X | ±0.30 | X.X | ±2° |
| X.XX | ±0.20 | X.XX | ±1° |
| | | UNITS: | mm |

USE: CUSTOMER
APPD: Liuzhengling
CHKD: Steven
DR: FangSongLe

TITLE: 1.0 Pitch Wafer 90° SMT
PART NO.: A1007AWR-NP
DWG NO.:
SCALE 1 : 1
SHEET 1 / 1