REV	DESCRIPTION	DESIGN	DATE
A	NEW RELEASE	Lingqing	2021/06/02
B	Change the needle length	Lingqing	2022/03/16

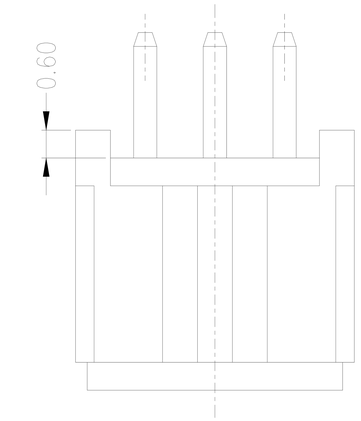

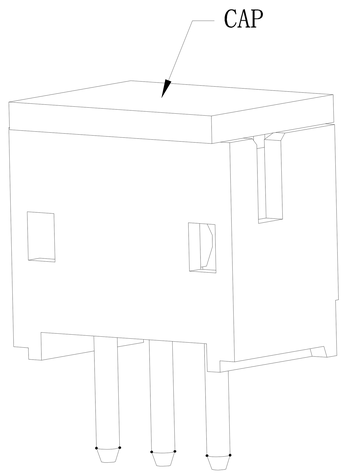

Circuits	Dimensions(mm)		
	A	B	C
02	1.50	3.60	4.50
03	3.00	5.10	6.00
04	4.50	6.60	7.50
05	6.00	8.10	9.00
06	7.50	9.60	10.50
07	9.00	11.10	12.00
08	10.50	12.60	13.50
09	12.00	14.10	15.00
10	13.50	15.60	16.50
11	15.00	17.10	18.00
12	16.50	18.60	19.50
13	18.00	20.10	21.00
14	19.50	21.60	22.50
15	21.00	23.10	24.00
16	22.50	24.60	25.50

Specifications:

Contact resistance:≤20mΩ
Insulation resistance:≥500MΩ
Rated voltage:125V AC DC
Rated current:1.0A AC DC
Withstand voltage:500V AC/minute
Temperature range:-25℃～ +105℃
Housing:LCP UL94V-0,Natural
Cap:PA9T UL94V-0,Natural
Contacts:Brass/Sn-plated

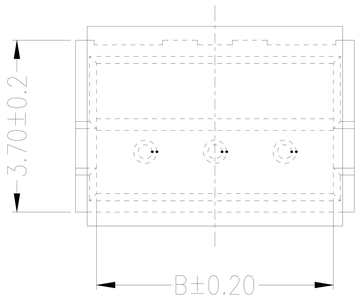

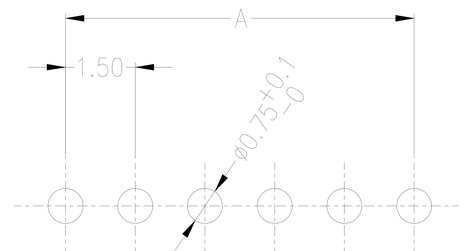

RECOMMENGED PCB LAYOUT(TOP VIEW)
TOLERANCE:±0.05mm

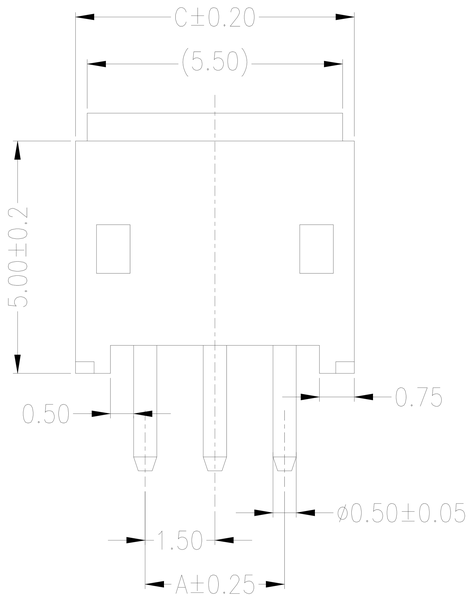

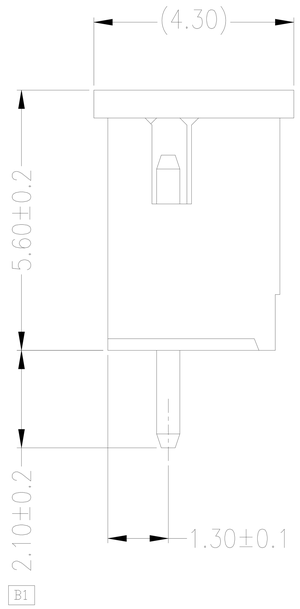

紅焱電子有限公司			TITLE: 1.50mm pitch 180°Wafe DIP type	
GENERAL TOLERANCE		USE: CUSTOMER	PART NO.: T1502A-NP	
X. ±0.50	X. ±5°	APPD: Shaojinghe	DWG NO.:	
X.X ±0.30	X.X ±2°	CHKD: Fangsongle		
X.XX ±0.20	X.XX ±1°	DR: Zenglingqing	SCALE 1 : 1	SHEET 1 / 1
	UNITS: mm			

REV	DESCRIPTION	DESIGN	DATE
A	NEW RELEASE	Lingqing	2021/02/23

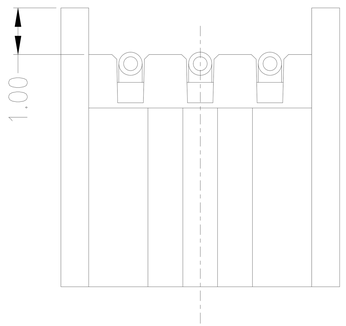

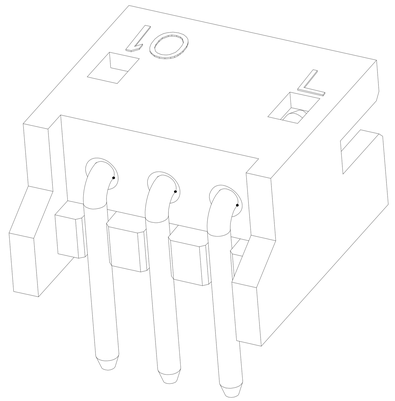

Specifications:

Contact resistance:≤20mΩ
Insulation resistance:≥500MΩ
Rated voltage:125V AC DC
Rated current:1.0A AC DC
Withstand voltage:500V AC/minute
Temperature range:-25℃～ +105℃
Housing:LCP UL94V-0,Natural
Contacts:Brass/Sn-plated

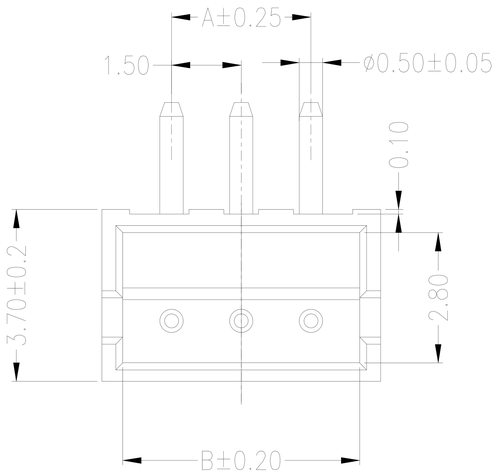

Circuits	Dimensions(mm)		
	A	B	C
02	1.50	3.60	4.50
03	3.00	5.10	6.00
04	4.50	6.60	7.50
05	6.00	8.10	9.00
06	7.50	9.60	10.50
07	9.00	11.10	12.00
08	10.50	12.60	13.50
09	12.00	14.10	15.00
10	13.50	15.60	16.50
11	15.00	17.10	18.00
12	16.50	18.60	19.50
13	18.00	20.10	21.00
14	19.50	21.60	22.50
15	21.00	23.10	24.00
16	22.50	24.60	25.50

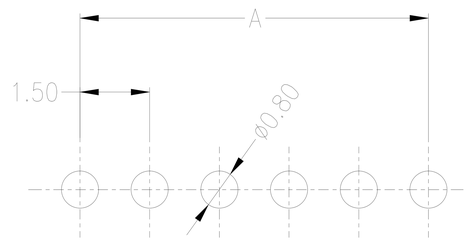

RECOMMENGED PCB LAYOUT(TOP VIEW)
TOLERANCE:±0.05mm

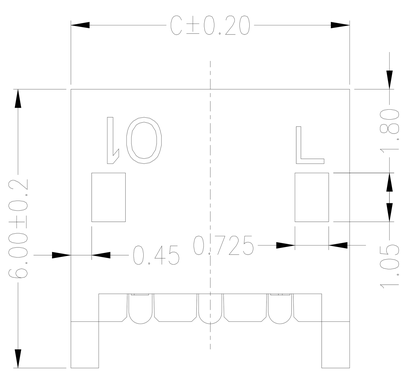

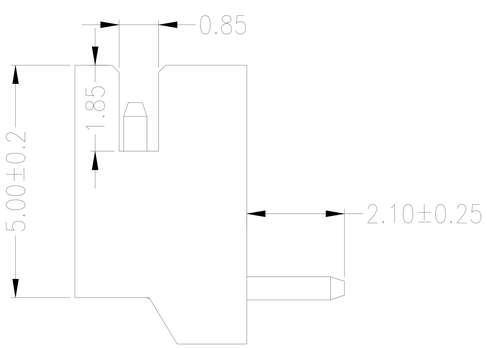

紅焱電子有限公司			TITLE: 1.50mm pitch 90°Wafe DIP type	
GENERAL TOLERANCE		USE: CUSTOMER	PART NO.: T1502AWD-NP	
X. ±0.50	X. ±5°	APPD: Zhangzhongyong	DWG NO.:	
X.X ±0.30	X.X ±2°	CHKD: Fangsongle		
X.XX ±0.20	X.XX ±1°	DR: Zenglingqing	SCALE 1 : 1	SHEET 1 / 1
	UNITS: mm			