REV	DESCRIPTION	DESIGN	DATE
A0	NEW RELEASE	Wudanping	2016.05.07
A2	Improve inspection efficiency and quality	Zenglingqing	2018.06.06
A3	Adjust flatness	Jiangjianyin	2020.06.18

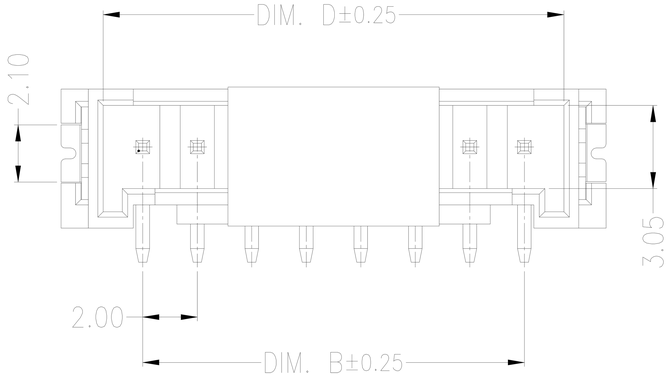

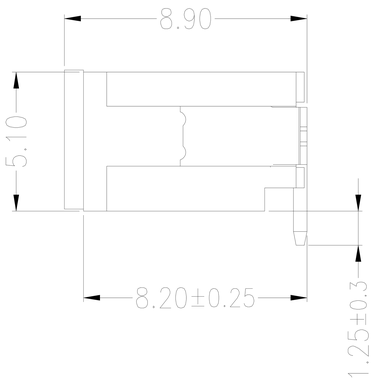

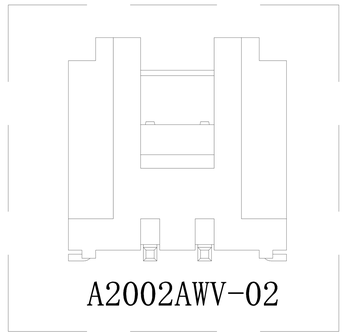

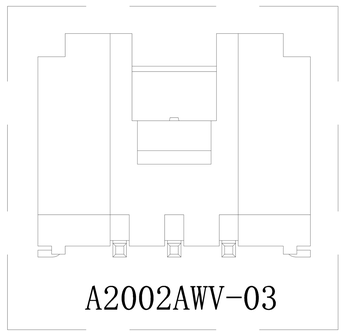

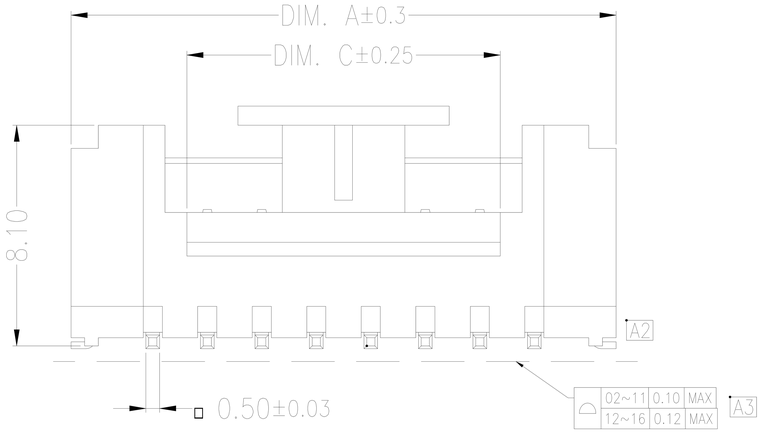

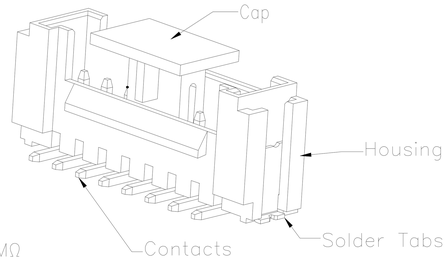

Specifications:
Contact resistance:≤20mΩ
Insulation resistance:≥1000MΩ
Rated voltage:250V AC DC
Rated current:2.0A AC DC
Withstand Voltage: 1000V AC/minute
Temperature Range:-25℃～ +105℃
Housing:LCP, UL94V-0/Nature
Cap:LCP, UL94V-0/Nature
Contacts:Brass/(Sn or Matte Sn or Gold)
Solder Tabs:Phosphor Bronze/(Sn or Matte Sn or Gold)

Circuits	Dimensions(mm)			
	DIM. A	DIM. B	DIM. C	DIM. D
02	8.00	2.00	2.70	4.90
03	10.00	4.00	2.70	6.90
04	12.00	6.00	3.50	8.90
05	14.00	8.00	5.50	10.90
06	16.00	10.00	7.50	12.90
07	18.00	12.00	9.50	14.90
08	20.00	14.00	11.50	16.90
09	22.00	16.00	13.50	18.90
10	24.00	18.00	15.50	20.90
11	26.00	20.00	15.50	22.90
12	28.00	22.00	15.50	24.90
13	30.00	24.00	15.50	26.90
14	32.00	26.00	15.50	28.90
15	34.00	28.00	15.50	30.90
16	36.00	30.00	15.50	32.90

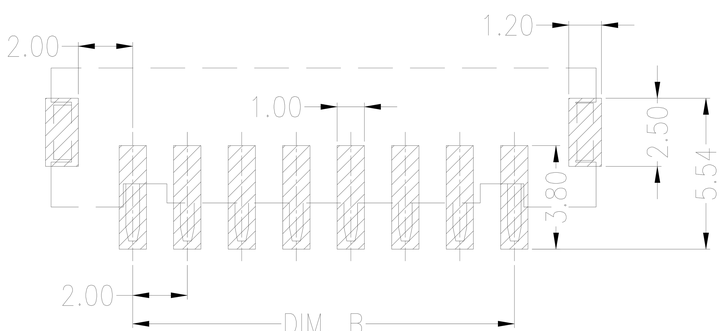

SUGGESTED PCB LAYOUT

紅焱電子有限公司

GENERAL TOLERANCE			
X.	±0.50	X.	±5°
X.X	±0.30	X.X	±2°
X.XX	±0.20	X.XX	±1°
		UNITS:	mm

USE: CUSTOMER
APPD: Shaojinghe
CHKD: Zenglingqing
DR: Jiangjianyin

TITLE: 2.0mmPITCH 180°WAFER SMT TYPE
PART NO.: A2002AWV-NP
DWG NO.:
SCALE 1 : 1
SHEET 1 / 1

REV	DESCRIPTION	DESIGN	DATE
A0	NEW RELEASE	Wudanping	2016/04/10
A1	Change the size	Jiangjianyin	2018/04/19
A2	Adjust flatness	Jiangjianyin	2020/06/18

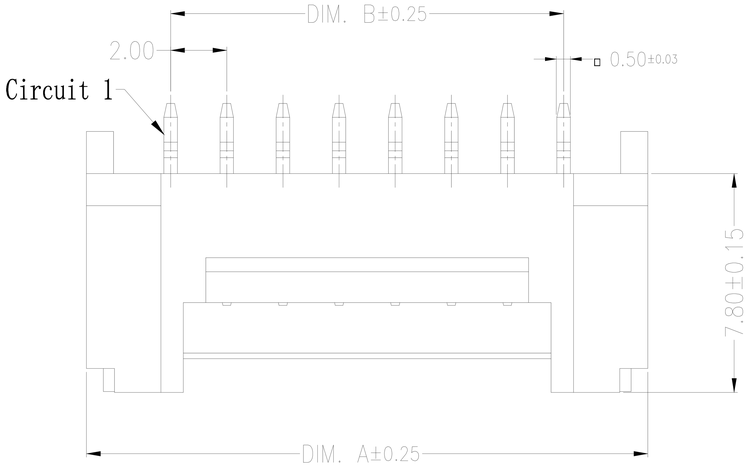

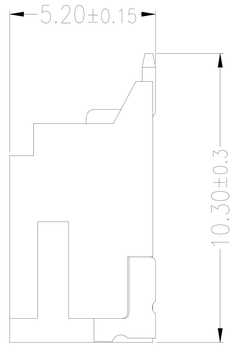

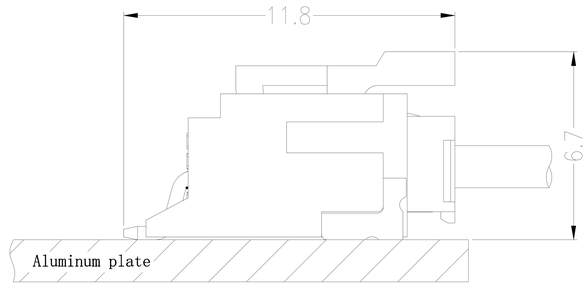

Assembly Layout

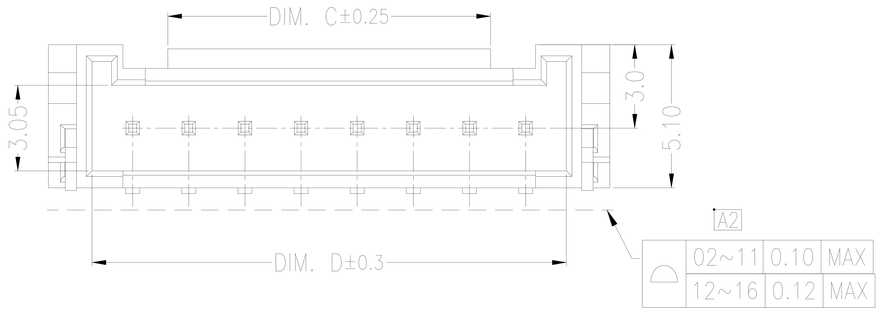

3D VIEWS

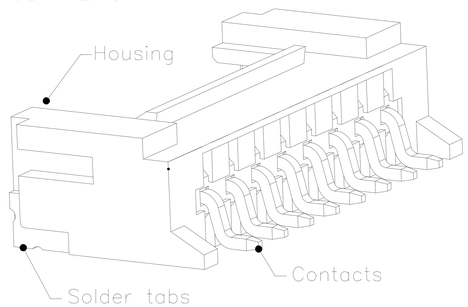

Specifications:
- Contact resistance:≤20mΩ
- Insulation resistance:≥1000MΩ
- Rated voltage:250V AC DC
- Rated current:2.0A AC DC
- Withstand voltage:1000V AC/minute
- Temperature range:−25℃～ +105℃
- Housing:LCP/PA6T/PA9T,UL94V−0(Natural,Black)
- Contacts:Brass/Sn
- Solder tabs:Brass/Sn

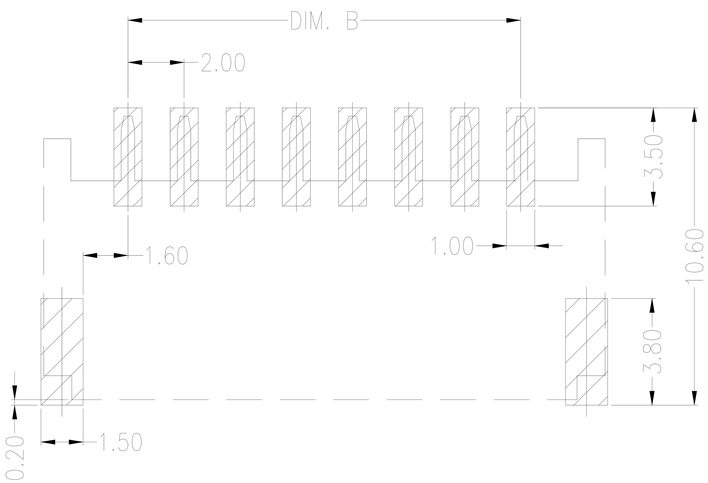

SUGGESTED PCB LAYOUT

Circuits	Dimensions(mm)			
	DIM.A	DIM.B	DIM.C	DIM.D
02	8.00	2.00	2.70 A/1	4.75 A/1
03	10.00	4.00	3.20 A/1	6.75 A/1
04	12.00	6.00	3.50	8.90
05	14.00	8.00	5.50	10.90
06	16.00	10.00	7.50	12.90
07	18.00	12.00	9.50	14.90
08	20.00	14.00	11.50	16.90
09	22.00	16.00	13.50	18.90
10	24.00	18.00	15.50	20.90
11	26.00	20.00	15.50	22.90
12	28.00	22.00	15.50	24.90
13	30.00	24.00	15.50	26.90
14	32.00	26.00	15.50	28.90
15	34.00	28.00	15.50	30.90
16	36.00	30.00	15.50	32.90

紅焱電子有限公司

GENERAL TOLERANCE			
X.	±0.50	X.	±5°
X.X	±0.30	X.X	±2°
X.XX	±0.20	X.XX	±1°
		UNITS:	mm

USE: CUSTOMER
APPD: Shaojinghe
CHKD: Zenglingqing
DR: Jiangjianyin

TITLE: 2.00mmPITCH 90°WAFER SMT TYPE
PART NO.: A2002AWR-NP
DWG NO.: JKUN/GCKH−0530
SCALE 1 : 1
SHEET 1 / 1