REV	ECN No.	DESCRIPTION	DESIGN	DATE
A0		Release	蒋建银	2017.12.01

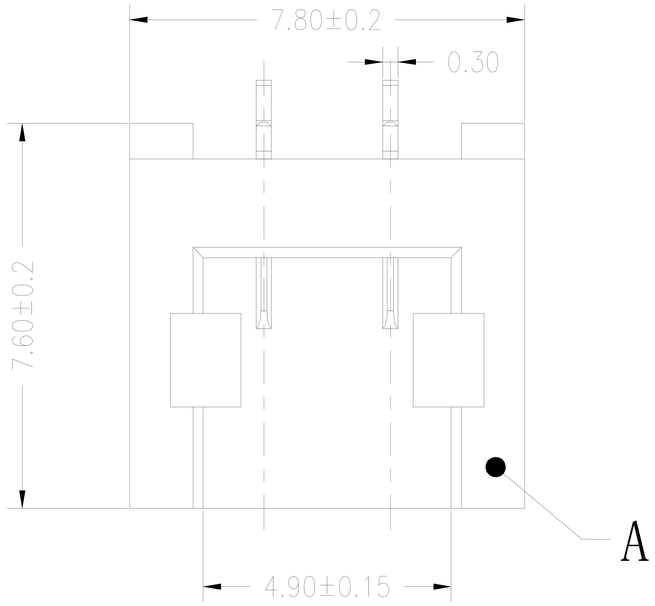

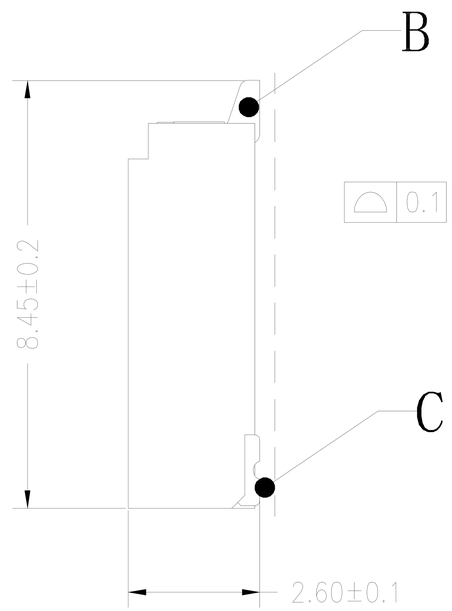

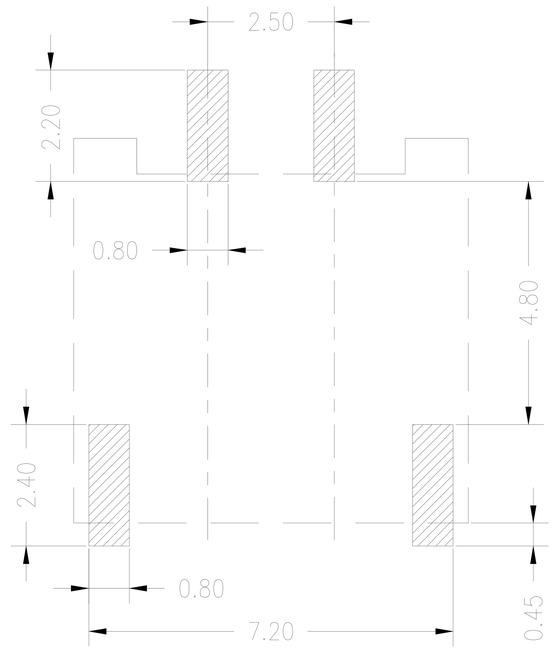

Board Layout

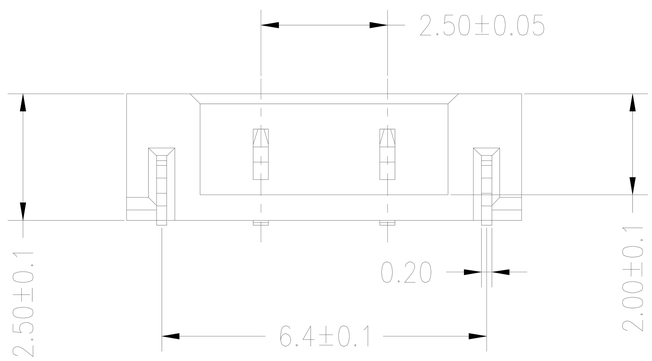

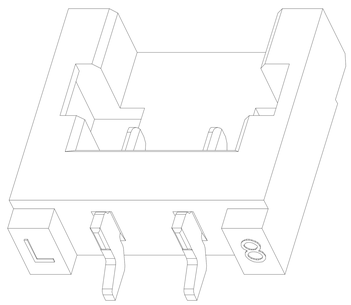

主要技术参数 Main Specifications

线　　数 (Poles): 02
接触电阻 (Contact resistance):≤20mΩ
绝缘电阻 (Insulation resistance):≥1000MΩ
额定电压 (Rated voltage):250V AC DC
额定电流 (Rated current):2.0A AC DC
耐 电 压 (Withstand Voltage): 1000V AC/minute
温度范围 (Temperature Range) :-25℃～ +85℃

ITEM	COMPONENT		Q'TY	MATERIAL	FINISH
C	SOLDER TAB		2 PCS	PhosphorBronze	MATTE SN
B	CONTACT		2 PCS	PhosphorBronze	MATTE SN
A	HOUSING		1 PCS	LCP	UL 94V-0, COLOR:BEIGE

紅焱電子有限公司

TITLE: –
2.5mmPITCH 90°WAFER SMT TYPE

X.±0.5	X.±5°	USE: CUSTOMER	PART NO.: A2503AWR-2P
.X±0.3	.X±2°	APPD: 谭龙清	DWG NO.:
.XX±0.25	.XX±1°	CHKD: 田峰	
--	--		
	UNITS: mm	DR: 蒋建银	SCALE 1 : 1 / SHEET 1 / 1