REV	DESCRIPTION	DESIGN	DATE
A0	NEW RELEASE	Wudanping	2017/05/24
A1	Add black material	Wudanping	2017/09/28
A2	Increase the gold-plating specification	Zhouxiulong	2017/10/06
A3	The correct current	Jiangjianyin	2019/03/29

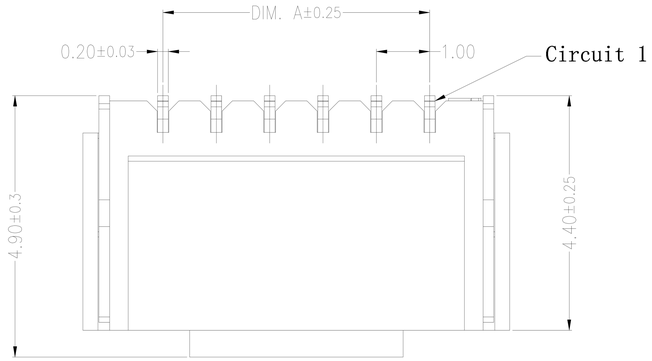

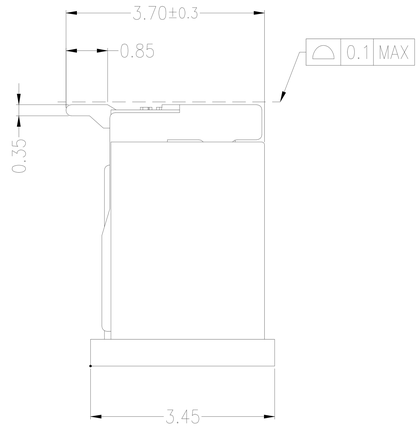

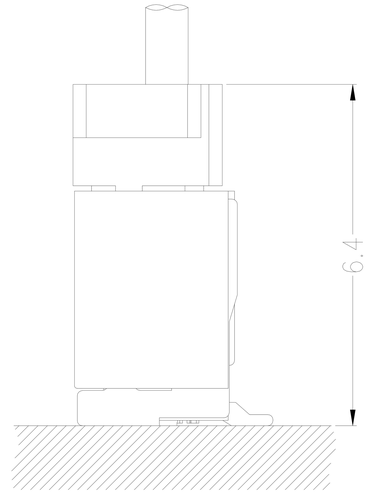

Assembly Layout

缺口为浇口工艺，减少自动机加盖卡料，
缺口位置不固定，也可在另一侧

盖子装于产品中心

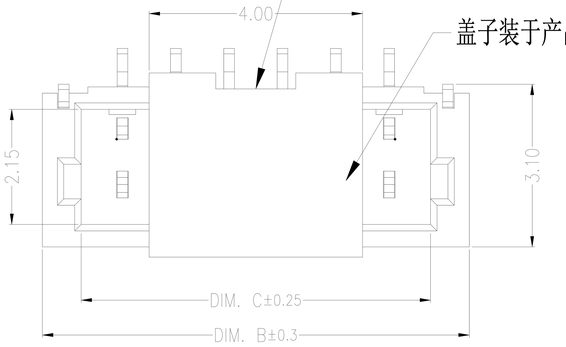

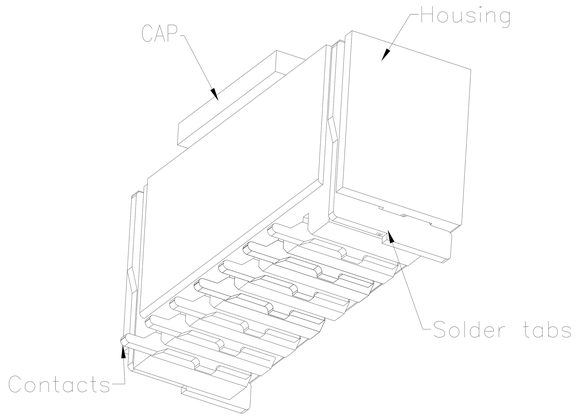

Specifications:

Contact resistance:≤20mΩ
Insulation resistance:≥100MΩ
Rated voltage:50V AC DC
Rated current:1.0A AC DC A3
Withstand voltage:500V AC/minute
Temperature range:-25℃～ +105℃
Housing:LCP UL94V-0(Natural/Black)
CAP:LCP UL94V-0,Natural
Contacts:Phosphor bronze(Matte sn/Gold plating)
Solder tabs:Phosphor bronze/Matte sn

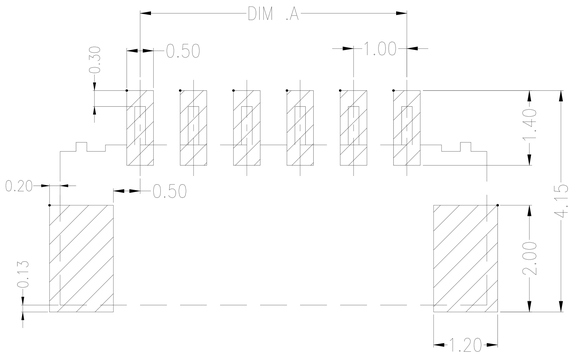

Recommend PCB Layout

Circuit	Dimensions(mm)		
	DIM.A	DIM.B	DIM.C
02	1.00	4.00	2.45
03	2.00	5.00	3.45
04	3.00	6.00	4.45
05	4.00	7.00	5.45
06	5.00	8.00	6.45
07	6.00	9.00	7.45
08	7.00	10.00	8.45
09	8.00	11.00	9.45
10	9.00	12.00	10.45
11	10.00	13.00	11.45
12	11.00	14.00	12.45
13	12.00	15.00	13.45
14	13.00	16.00	14.45
15	14.00	17.00	15.45
16	15.00	18.00	16.45
20	19.00	22.00	20.45

紅焱電子有限公司

GENERAL TOLERANCE			
X.	±0.50	X.	±5°
X.X	±0.30	X.X	±2°
X.XX	±0.20	X.XX	±1°
		UNITS:	mm

USE: CUSTOMER
APPD: Shaojinghe
CHKD: Zlinglingqing
DR: Jiangjianyin

TITLE: 1.0mmPITCH 180°WAFER SMT TYPE
PART NO.: A1001AWV-NP
DWG NO.:
SCALE 1 : 1
SHEET 1 / 1

REV	DESCRIPTION	DESIGN	DATE
A0	NEW RELEASE	Wudanping	2016/05/05
A1	Increase the gold-plating specification	Wudanping	2017/03/03
A2	The correct current	Jiangjianyin	2019/03/29

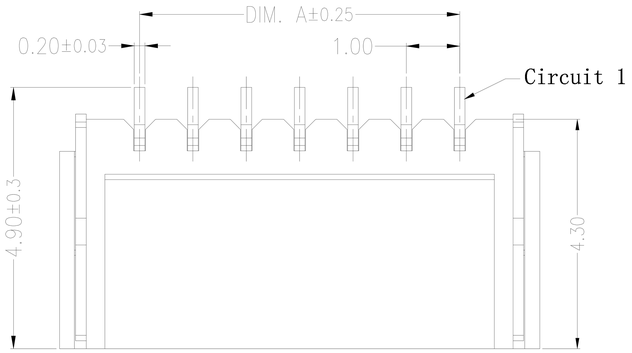

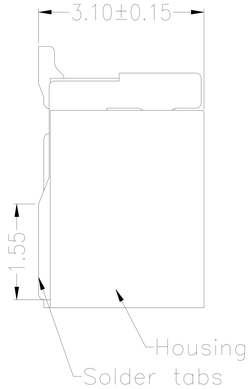

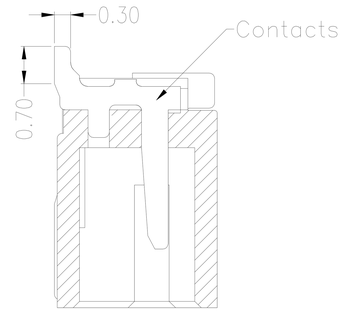

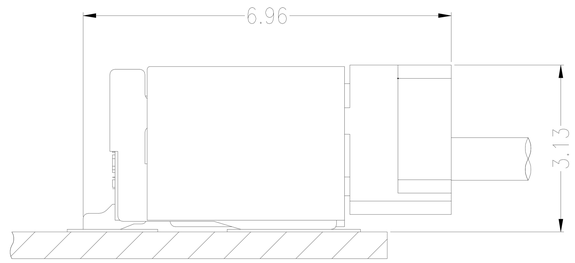

Assembly Layout

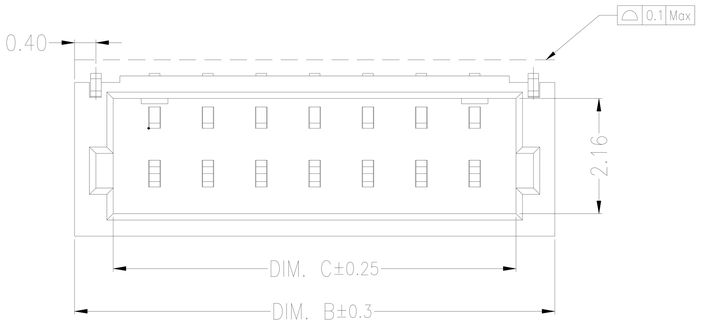

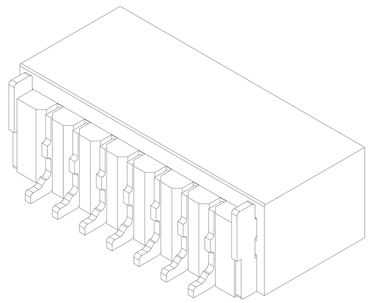

Specifications:

Contact resistance:≤20mΩ
Insulation resistance:⩾100MΩ
Rated voltage:50V AC DC
Rated current:1.0A AC DC A2.
Withstand voltage:500V AC/minute
Temperature range:-25℃～ +105℃
Housing:LCP UL94V-0(Natural/Black)
Contacts:Phosphor bronze(Matte sn/Gold plating)
Solder tabs:Phosphor bronze/Matte sn

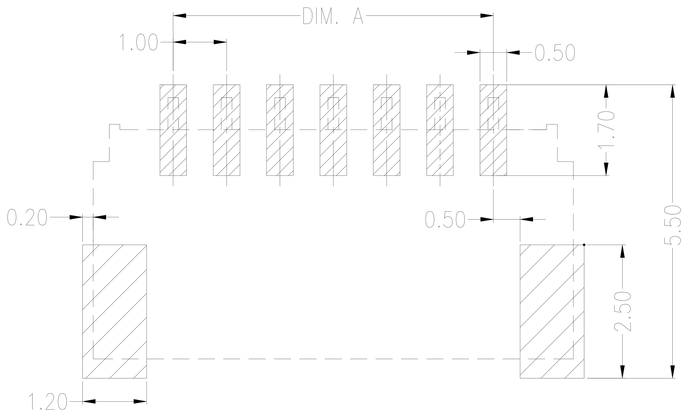

Recommend PCB Layout

Circuit	Dimensions(mm)		
	DIM.A	DIM.B	DIM.C
02	1.00	4.00	2.45
03	2.00	5.00	3.45
04	3.00	6.00	4.45
05	4.00	7.00	5.45
06	5.00	8.00	6.45
07	6.00	9.00	7.45
08	7.00	10.00	8.45
09	8.00	11.00	9.45
10	9.00	12.00	10.45
11	10.00	13.00	11.45
12	11.00	14.00	12.45
13	12.00	15.00	13.45
14	13.00	16.00	14.45
15	14.00	17.00	15.45
16	15.00	18.00	16.45
20	19.00	22.00	20.45

紅焱電子有限公司

GENERAL TOLERANCE			
X.	±0.50	X.	±5°
X.X	±0.30	X.X	±2°
X.XX	±0.20	X.XX	±1°
		UNITS:	mm

USE: CUSTOMER
APPD: Shaojinghe
CHKD: Zlinglingqing
DR: Jiangjianyin

TITLE: 1.0mmPITCH 90°WAFER SMT TYPE
PART NO.: A1001AWR-NP
DWG NO.:
SCALE 1 : 1
SHEET 1 / 1