REV	DESCRIPTION	DESIGN	DATE
A	NEW RELEASE	Lingqing	2020/08/22

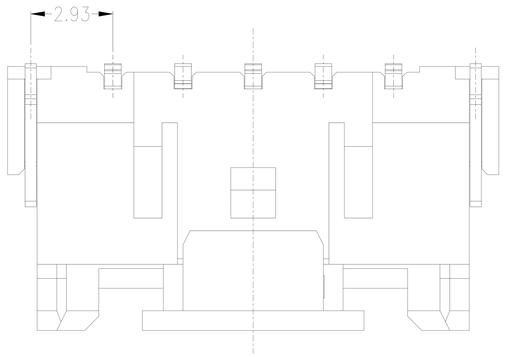

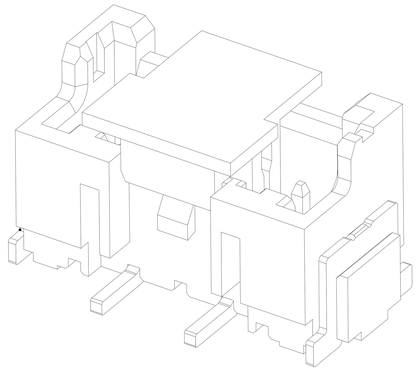

Circuits	Dimensions(mm)		
	A	B	C
02	2.50	10.00	5.30
03	5.00	12.50	
04	7.50	15.00	6.40
05	10.00	17.50	
06	12.50	20.00	
07	15.00	22.50	
08	17.50	25.00	
09	20.00	27.50	
10	22.50	30.00	
11	25.00	32.50	
12	27.50	35.00	
13	30.00	37.50	
14	32.50	40.00	
15	35.00	42.50	

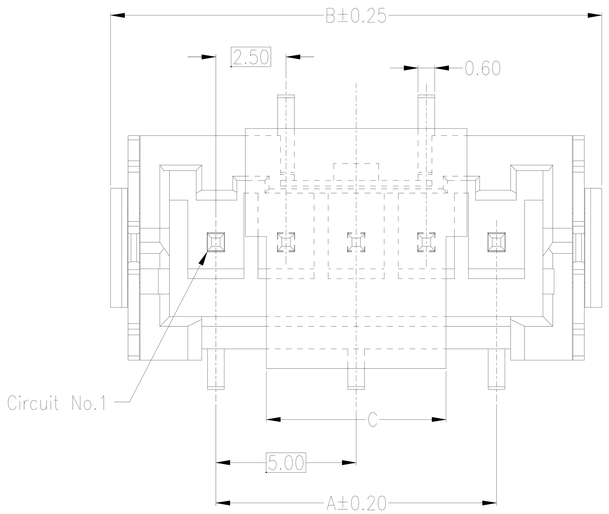

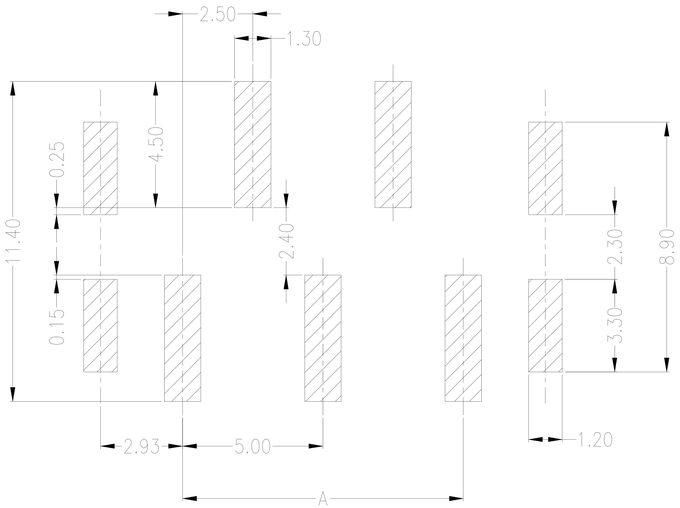

RECOMMENDED PCB LAYOUT

Specifications:

Contact resistance:≤10mΩ
Insulation resistance:⩾1000MΩ
Rated voltage:250V AC DC
Rated current:3.0A AC DC
Withstand Voltage: 1000V AC/minute
Temperature Range:-25°C～ +85°C
Housing:PA9T UL94V-0,Natural(Beige)
Cap:PA9T UL94V-0,Natural(Beige)
Contacts:Brass/Sn-plated
Solder Tabs:Brass/Sn-plated

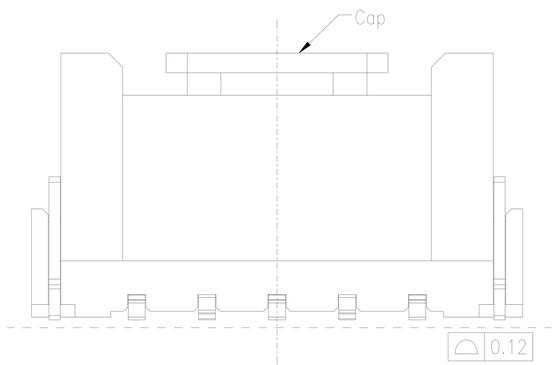

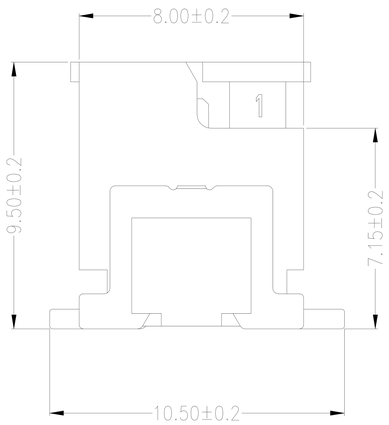

紅焱電子有限公司			TITLE: 2.50mmPITCH 180°WAFER SMT TYPE	
GENERAL TOLERANCE		USE: CUSTOMER	PART NO.: A2507AWV-NP	
X. ±0.50	X. ±5°	APPD: WangFeng	DWG NO.:	
X.X ±0.30	X.X ±2°	CHKD: Shaojinghe		
X.XX ±0.20	X.XX ±1°	DR: Zenglingqing	SCALE 1 : 1	SHEET 1 / 1
	UNITS: mm			