REV	DESCRIPTION	DESIGN	DATE
A	NEW RELEASE	Lingqing	2020/12/03

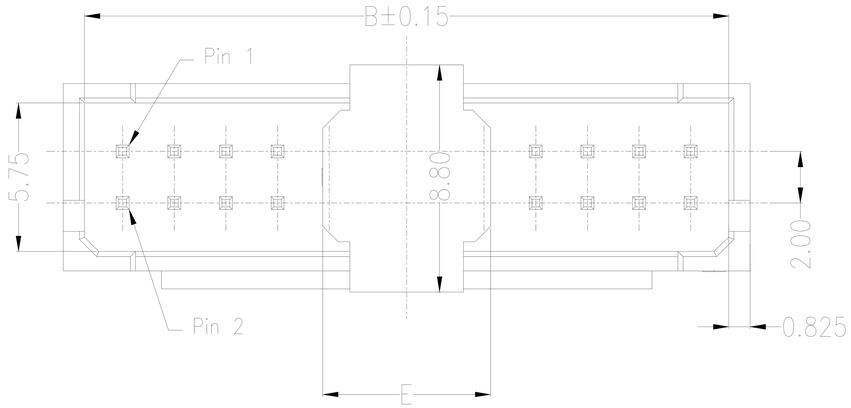

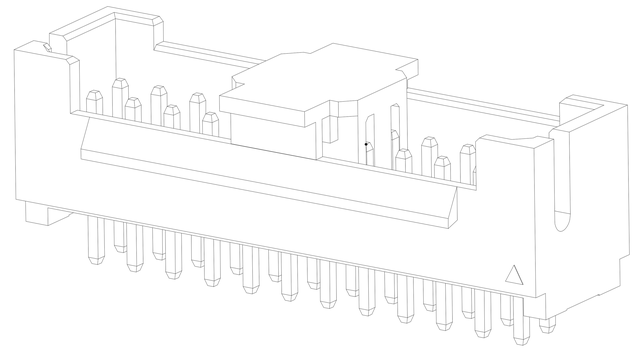

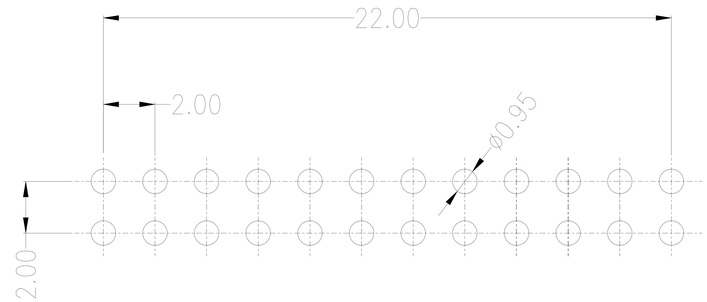

RECOMMENGED PCB LAYOUT(TOP VIEW)

TOLERANCE:±0.05mm

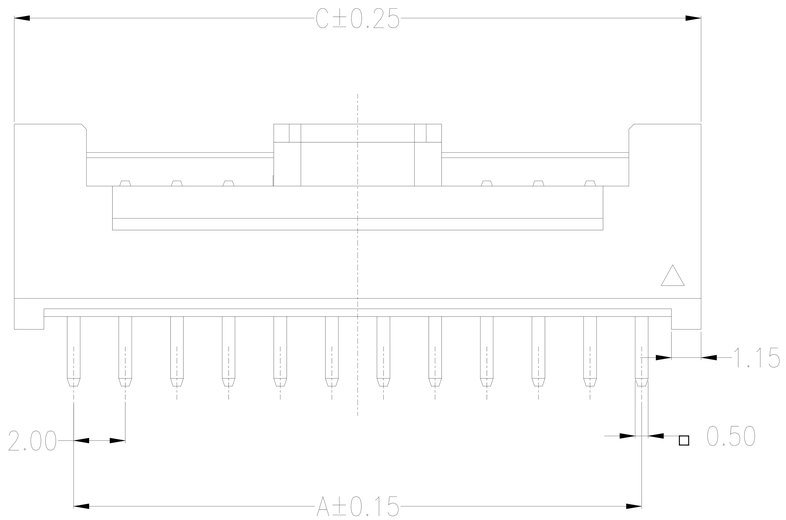

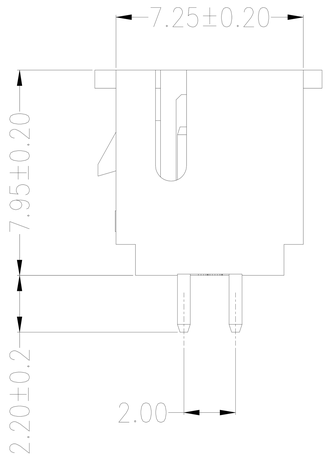

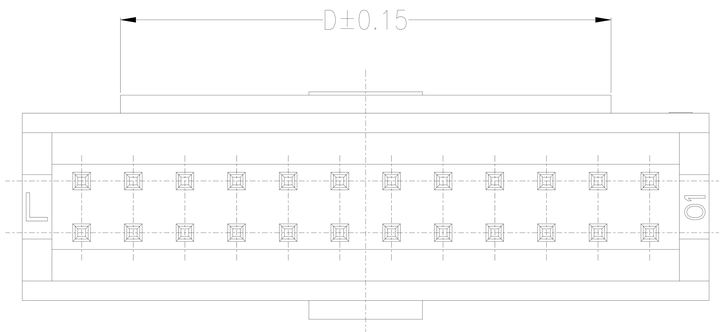

Specifications:

Contact resistance:≤30mΩ
Insulation resistance:≥1000MΩ
Rated voltage:250V AC DC
Rated current:3.0A AC DC
Withstand Voltage: 1000V AC/minute
Temperature Range:-25°C~ +85°C
Housing: LCP UL94V-0, Natural
Cap: LCP UL94V-0, Natural
Contacts: Brass Sn-plated

Circuits	Dimensions(mm)				
	A	B	C	D	E
202(2X2)	2.00	4.95	6.60	3.00	小盖(4.5)
203(2X3)	4.00	6.95	8.60	3.00	大盖(6.5)
204(2X4)	6.00	8.95	10.60	3.00	
205(2X5)	8.00	10.95	12.60	5.00	
206(2X6)	10.00	12.95	14.60	7.00	
207(2X7)	12.00	14.95	16.60	9.00	
208(2X8)	14.00	16.95	18.60	11.00	
209(2X9)	16.00	18.95	20.60	13.00	
210(2X10)	18.00	20.95	22.60	15.00	
211(2X11)	20.00	22.95	24.60	17.00	
212(2X12)	22.00	24.95	26.60	19.00	
213(2X13)	24.00	26.95	28.60	21.00	
214(2X14)	26.00	28.95	30.60	23.00	
215(2X15)	28.00	30.95	32.60	25.00	
216(2X16)	30.00	32.95	34.60	27.00	

紅焱電子有限公司

GENERAL TOLERANCE			
X.	±0.50	X.	±5°
X.X	±0.30	X.X	±2°
X.XX	±0.20	X.XX	±1°
		UNITS:	mm

USE: CUSTOMER
APPD: WangFeng
CHKD: Shaojinghe
DR: Zenglingqing

TITLE: 2.0mm pitch 180°Wafe DIP type

PART NO.: T2004A-2XNP

DWG NO.:

SCALE 1 : 1

SHEET 1 / 1

REV	DESCRIPTION	DESIGN	DATE
A	NEW RELEASE	Lingqing	2020/12/03

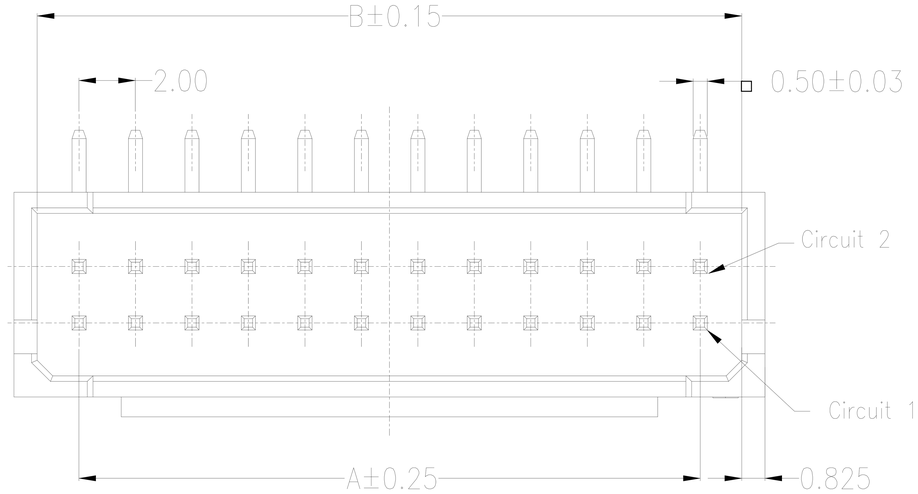

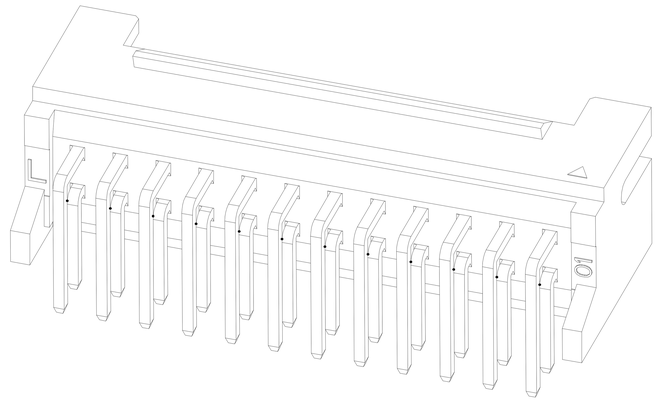

Specifications:

Contact resistance:≤30mΩ
Insulation resistance:≥1000MΩ
Rated voltage:250V AC DC
Rated current:3.0A AC DC
Withstand Voltage: 1000V AC/minute
Temperature Range:-25°C~ +85°C
Housing: LCP UL94V-0, Natural
Contacts: Brass Sn-plated

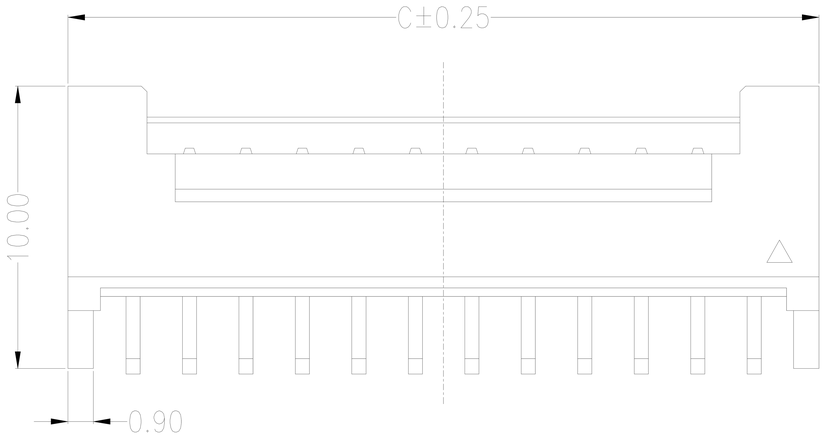

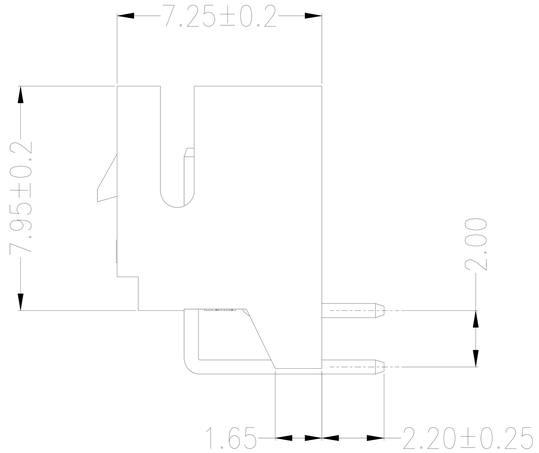

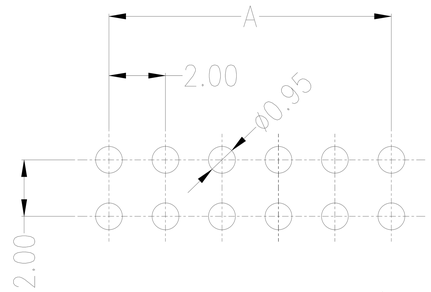

RECOMMENGED PCB LAYOUT(TOP VIEW)
TOLERANCE:±0.05mm

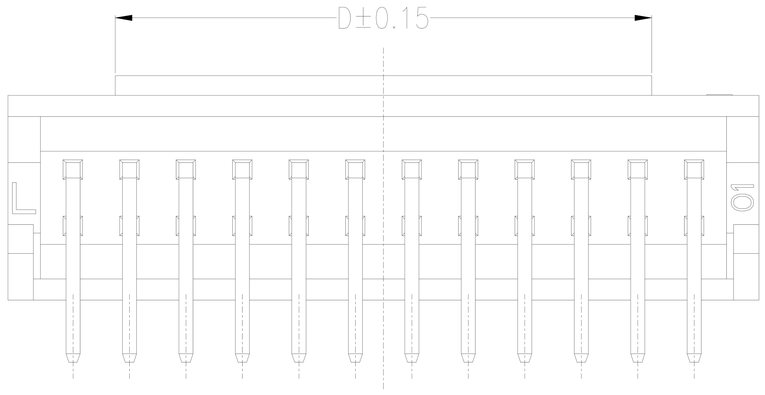

Circuits	Dimensions(mm)			
	A	B	C	D
202(2X2)	2.00	4.95	6.60	3.00
203(2X3)	4.00	6.95	8.60	3.00
204(2X4)	6.00	8.95	10.60	3.00
205(2X5)	8.00	10.95	12.60	5.00
206(2X6)	10.00	12.95	14.60	7.00
207(2X7)	12.00	14.95	16.60	9.00
208(2X8)	14.00	16.95	18.60	11.00
209(2X9)	16.00	18.95	20.60	13.00
210(2X10)	18.00	20.95	22.60	15.00
211(2X11)	20.00	22.95	24.60	17.00
212(2X12)	22.00	24.95	26.60	19.00
213(2X13)	24.00	26.95	28.60	21.00
214(2X14)	26.00	28.95	30.60	23.00
215(2X15)	28.00	30.95	32.60	25.00
216(2X16)	30.00	32.95	34.60	27.00

紅焱電子有限公司

GENERAL TOLERANCE			
X.	±0.50	X.	±5°
X.X	±0.30	X.X	±2°
X.XX	±0.20	X.XX	±1°
		UNITS:	mm

USE: CUSTOMER
APPD: WangFeng
CHKD: Shaojinghe
DR: Zenglingqing

TITLE: 2.0mm pitch 90°Wafe PIP type
PART NO.: T2004AWD-2XNP
DWG NO.:
SCALE 1 : 1
SHEET 1 / 1