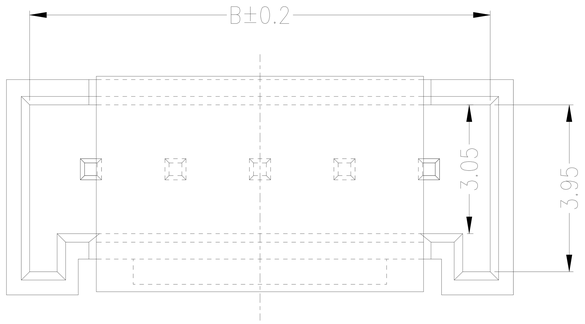

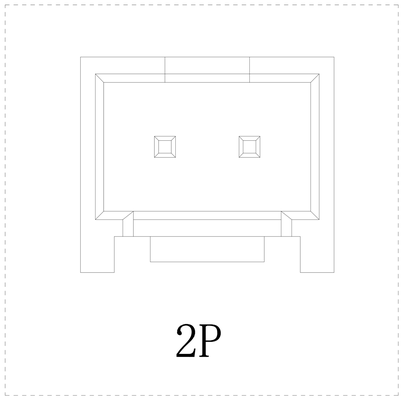

Circuits	Dimensions(mm)		
	A	B	C
02	2.00	4.90	6.00
03	4.00	6.90	8.00
04	6.00	8.90	10.00
05	8.00	10.90	12.00
06	10.00	12.90	14.00
07	12.00	14.90	16.00
08	14.00	16.90	18.00
09	16.00	18.90	20.00
10	18.00	20.90	22.00
11	20.00	22.90	24.00
12	22.00	24.90	26.00
13	24.00	26.90	28.00
14	26.00	28.90	30.00
15	28.00	30.90	32.00
16	30.00	32.90	34.00

REV	DESCRIPTION	DESIGN	DATE
A	NEW RELEASE	Lingqing	2021/06/02
B	Remove bottom Isolation reinforcement	Lingqing	2022/09/09

Specifications:

Contact resistance:≤20mΩ
Insulation resistance:≥1000MΩ
Rated voltage:250V AC DC
Rated current:2.0A AC DC
Withstand voltage:1000V AC/minute
Temperature range:-25℃～ +105℃
Housing:LCP UL94V-0,Natural
Cap:LCP UL94V-0,Natural
Contacts:Brass/Sn-plated

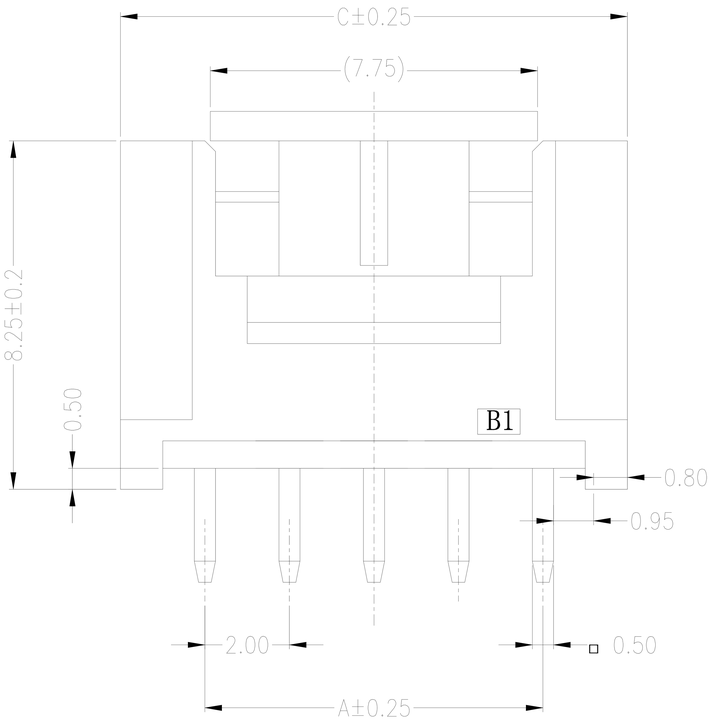

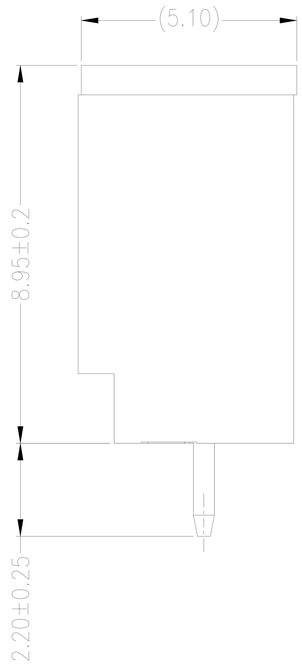

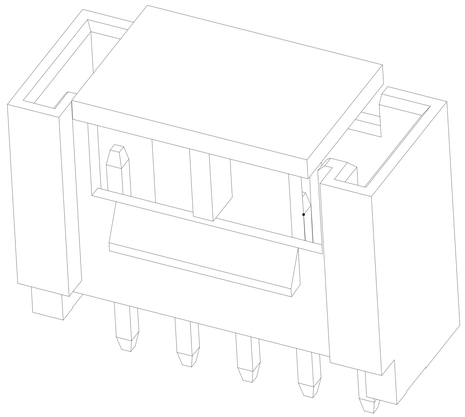

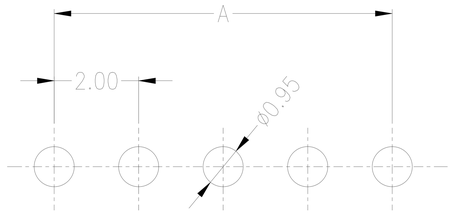

RECOMMENGED PCB LAYOUT(TOP VIEW)
TOLERANCE:±0.05mm

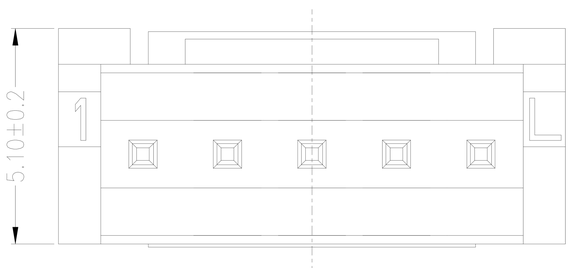

紅焱電子有限公司			TITLE: 2.00mm pitch 180°Wafe DIP type	
GENERAL TOLERANCE		USE: CUSTOMER	PART NO.: T2002A-NP	
X. ±0.50	X. ±5°	APPD: Shaojinghe	DWG NO.:	
X.X ±0.30	X.X ±2°	CHKD: Fangsongle		
X.XX ±0.20	X.XX ±1°	DR: Zenglingqing	SCALE 1 : 1	SHEET 1 / 1
	UNITS: mm			

REV	DESCRIPTION	DESIGN	DATE
A	NEW RELEASE	Lingqing	2021/06/02
B	Remove bottom Isolation reinforcement	Lingqing	2022/09/09

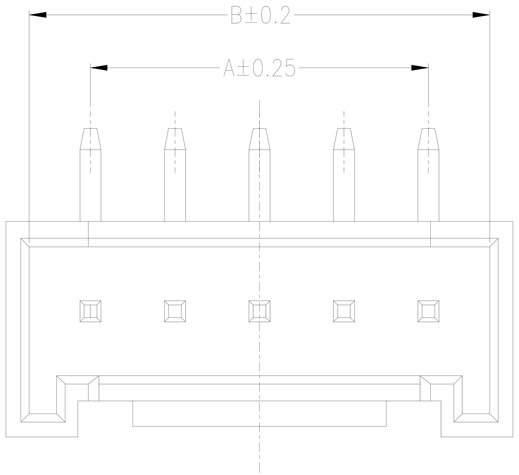

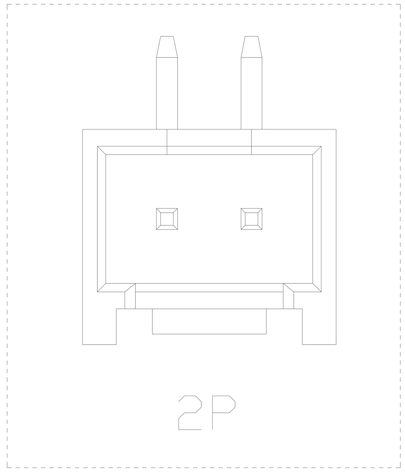

Circuits	Dimensions(mm)		
	A	B	C
02	2.00	4.90	6.00
03	4.00	6.90	8.00
04	6.00	8.90	10.00
05	8.00	10.90	12.00
06	10.00	12.90	14.00
07	12.00	14.90	16.00
08	14.00	16.90	18.00
09	16.00	18.90	20.00
10	18.00	20.90	22.00
11	20.00	22.90	24.00
12	22.00	24.90	26.00
13	24.00	26.90	28.00
14	26.00	28.90	30.00
15	28.00	30.90	32.00
16	30.00	32.90	34.00

Specifications:

Contact resistance:≤20mΩ
Insulation resistance:≥1000MΩ
Rated voltage:250V AC DC
Rated current:2.0A AC DC
Withstand voltage:1000V AC/minute
Temperature range:-25℃～ +105℃
Housing:LCP UL94V-0,Natural
Contacts:Brass/Sn-plated

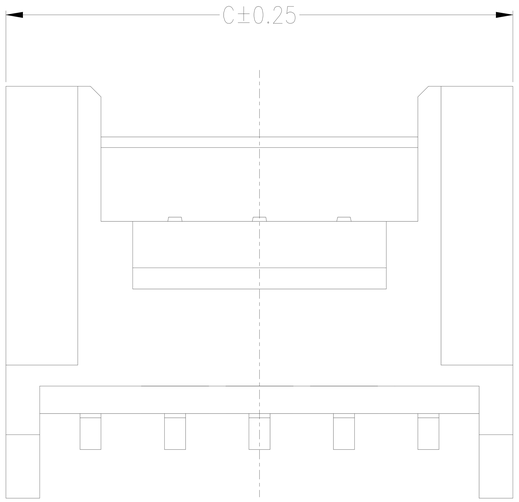

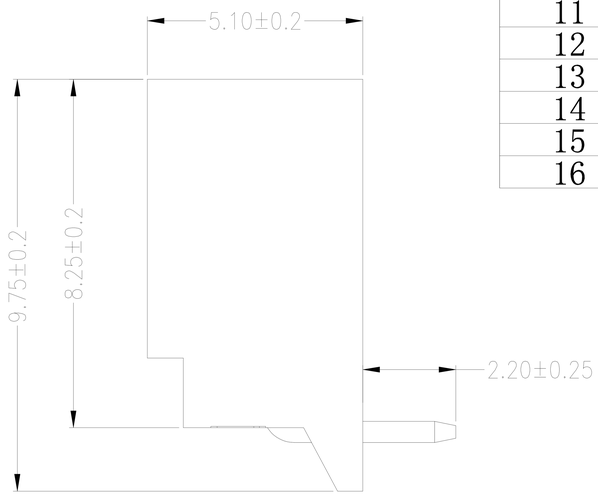

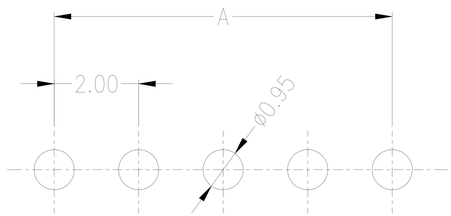

RECOMMENGED PCB LAYOUT(TOP VIEW)
TOLERANCE:±0.05mm

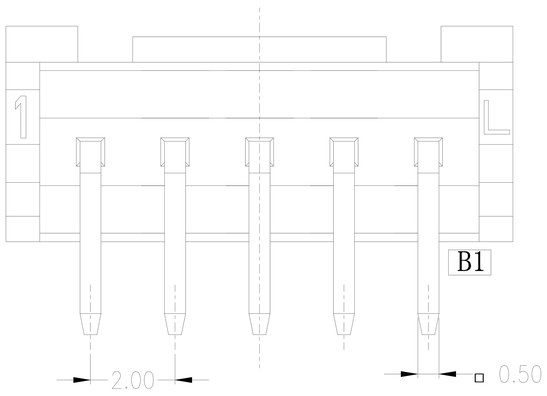

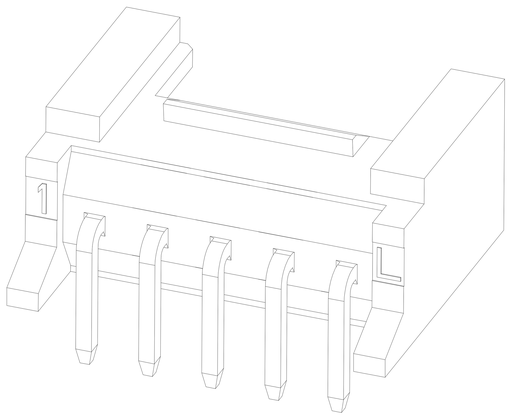

紅焱電子有限公司			TITLE: 2.00mm pitch 90°Wafe DIP type	
GENERAL TOLERANCE		USE: CUSTOMER	PART NO.: T2002AWD-NP	
X. ±0.50	X. ±5°	APPD: Shaojinghe	DWG NO.:	
X.X ±0.30	X.X ±2°	CHKD: Fangsongle		
X.XX ±0.20	X.XX ±1°	DR: Zenglingqing	SCALE 1 : 1	SHEET 1 / 1
	UNITS: mm			