| REV | DESCRIPTION | DESIGN | DATE |
|---|---|---|---|
| A | NEW RELEASE | Lingqing | 2021/06/02 |
| | | | |

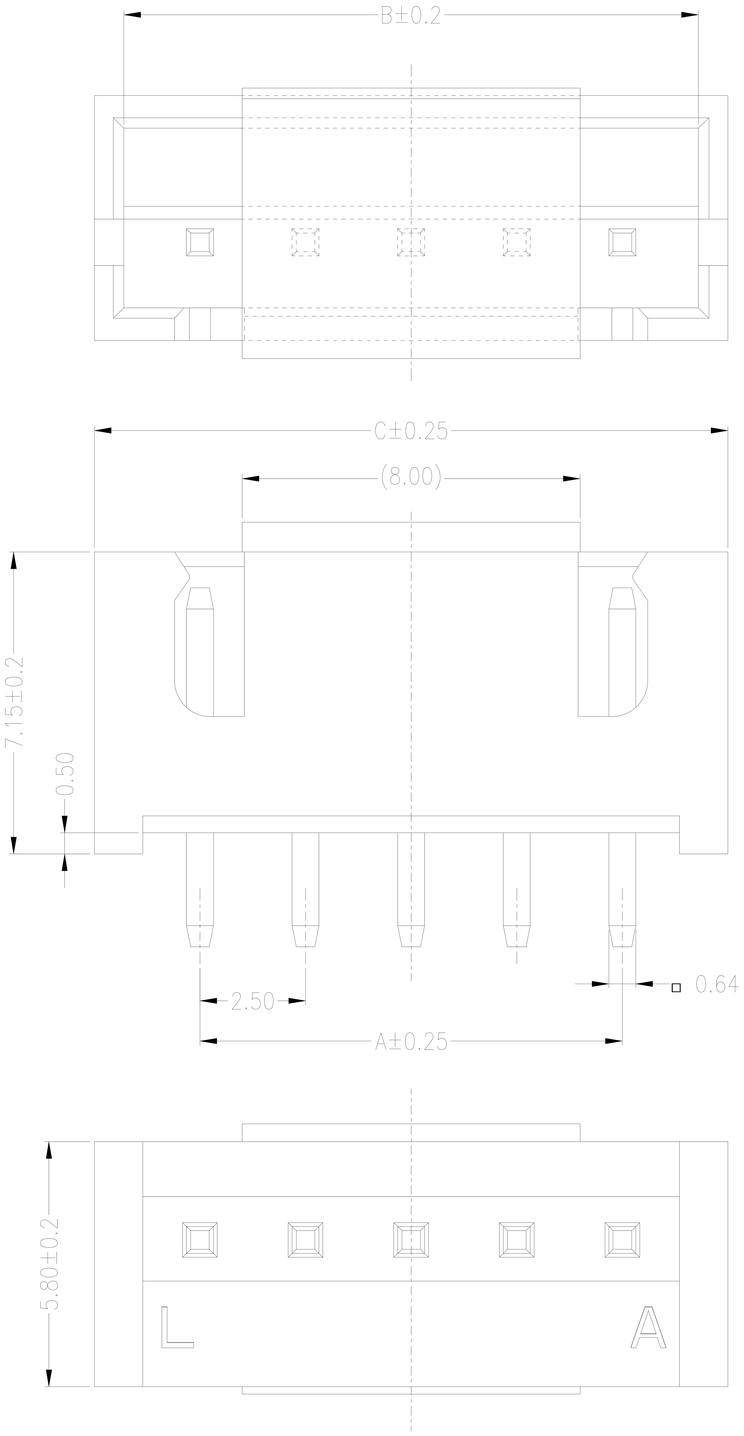


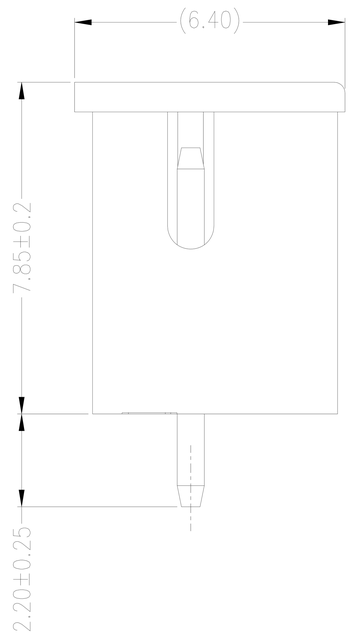


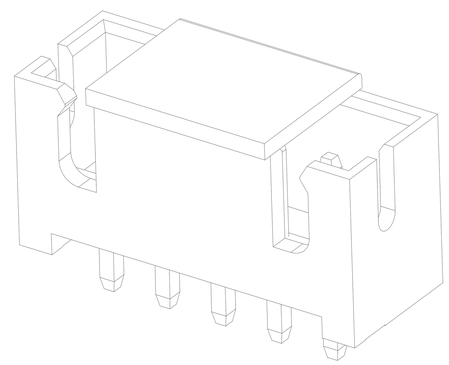

| Circuits | Dimensions(mm) | | |
|---|---|---|---|
| | A | B | C |
| 02 | 2.50 | 6.10 | 7.50 |
| 03 | 5.00 | 8.60 | 10.00 |
| 04 | 7.50 | 11.10 | 12.50 |
| 05 | 10.00 | 13.60 | 15.00 |
| 06 | 12.50 | 16.10 | 17.50 |
| 07 | 15.00 | 18.60 | 20.00 |
| 08 | 17.50 | 21.10 | 22.50 |
| 09 | 20.00 | 23.60 | 25.00 |
| 10 | 22.50 | 26.10 | 27.50 |
| 11 | 25.00 | 28.60 | 30.00 |
| 12 | 27.50 | 31.10 | 32.50 |
| 13 | 30.00 | 33.60 | 35.00 |
| 14 | 32.50 | 36.10 | 37.50 |
| 15 | 35.00 | 38.60 | 40.00 |
| 16 | 37.50 | 41.10 | 42.50 |

Specifications:

Contact resistance:≤20mΩ
Insulation resistance:≥1000MΩ
Rated voltage:250V AC DC
Rated current:3.0A AC DC
Withstand voltage:1000V AC/minute
Temperature range:-25℃～ +105℃
Housing:LCP UL94V-0,Natural
Cap:LCP UL94V-0,Natural
Contacts:Brass/Sn-plated

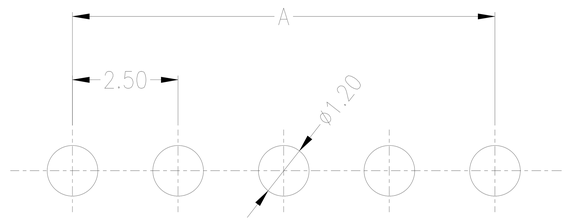


RECOMMENGED PCB LAYOUT(TOP VIEW)
TOLERANCE:±0.05mm

紅焱電子有限公司

| GENERAL TOLERANCE | | | |
|---|---|---|---|
| X. ±0.50 | X. ±5° | | |
| X.X ±0.30 | X.X ±2° | | |
| X.XX ±0.20 | X.XX ±1° | | |
| | UNITS: mm | | |

USE: CUSTOMER
APPD: Shaojinghe
CHKD: Fangsongle
DR: Zenglingqing

TITLE: 2.50mm pitch 180°Wafe PIP type
PART NO.: T2501A-NP
DWG NO.:
SCALE 1 : 1
SHEET 1 / 1

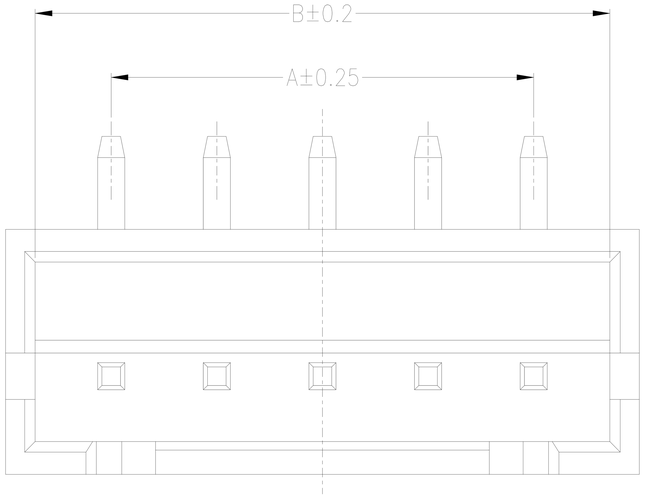


| Circuits | Dimensions(mm) | | |
|---|---|---|---|
| | A | B | C |
| 02 | 2.50 | 6.10 | 7.50 |
| 03 | 5.00 | 8.60 | 10.00 |
| 04 | 7.50 | 11.10 | 12.50 |
| 05 | 10.00 | 13.60 | 15.00 |
| 06 | 12.50 | 16.10 | 17.50 |
| 07 | 15.00 | 18.60 | 20.00 |
| 08 | 17.50 | 21.10 | 22.50 |
| 09 | 20.00 | 23.60 | 25.00 |
| 10 | 22.50 | 26.10 | 27.50 |
| 11 | 25.00 | 28.60 | 30.00 |
| 12 | 27.50 | 31.10 | 32.50 |
| 13 | 30.00 | 33.60 | 35.00 |
| 14 | 32.50 | 36.10 | 37.50 |
| 15 | 35.00 | 38.60 | 40.00 |
| 16 | 37.50 | 41.10 | 42.50 |

| REV | DESCRIPTION | DESIGN | DATE |
|---|---|---|---|
| A | NEW RELEASE | Lingqing | 2021/06/02 |
| | | | |

Specifications:

Contact resistance:≤20mΩ
Insulation resistance:≥1000MΩ
Rated voltage:250V AC DC
Rated current:3.0A AC DC
Withstand voltage:1000V AC/minute
Temperature range:-25℃～ +105℃
Housing:LCP UL94V-0,Natural
Contacts:Brass/Sn-plated

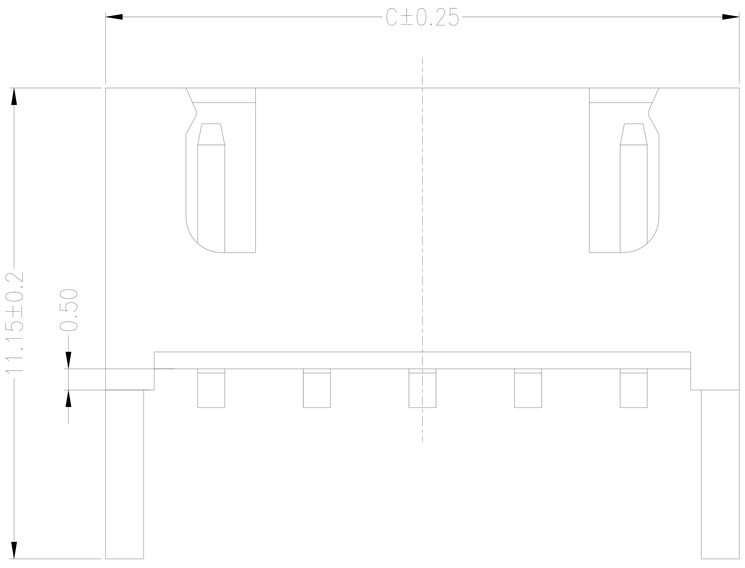


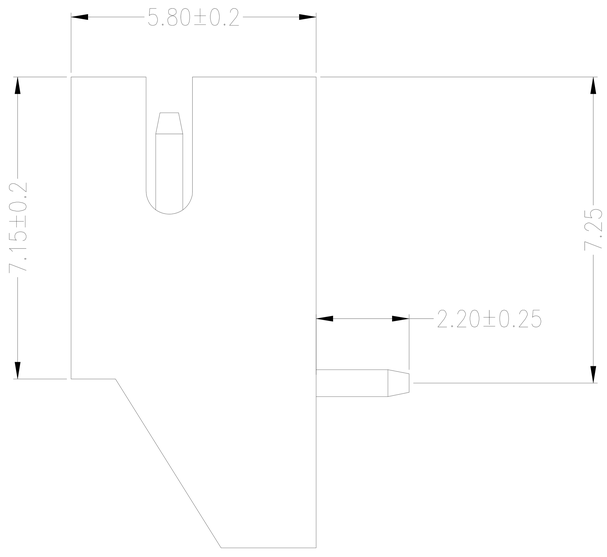


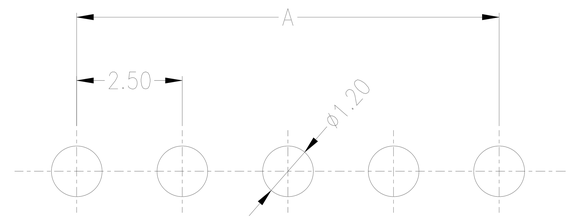


RECOMMENGED PCB LAYOUT(TOP VIEW)
TOLERANCE:±0.05mm

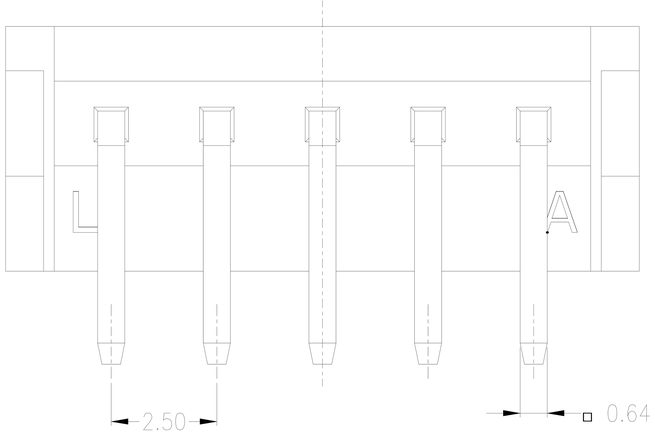


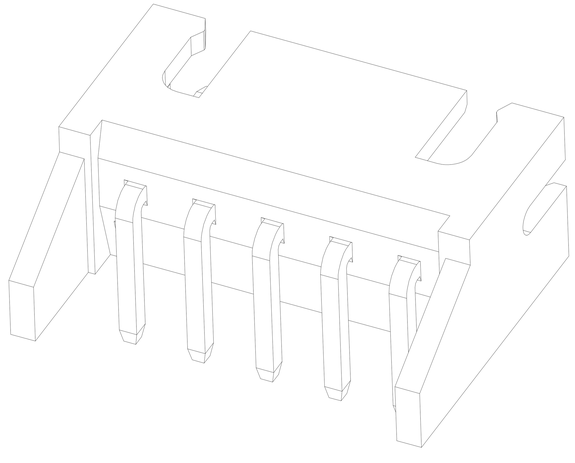

| 紅焱電子有限公司 | | | TITLE: 2.5mm pitch 90°Wafe DIP type | |
|---|---|---|---|---|
| GENERAL TOLERANCE | | USE: CUSTOMER | PART NO.: T2501AWD-NP | |
| X. ±0.50 | X. ±5° | APPD: Shaojinghe | DWG NO.: | |
| X.X ±0.30 | X.X ±2° | CHKD: Fangsongle | | |
| X.XX ±0.20 | X.XX ±1° | DR: Zenglingqing | SCALE 1 : 1 | SHEET 1 / 1 |
| | UNITS: mm | | | |