REV	DESCRIPTION	DESIGN	DATE
A0	NEW RELEASE	Wudanping	2016.05.07
A1	Adjust flatness	Jiangjianyin	2020/06/18

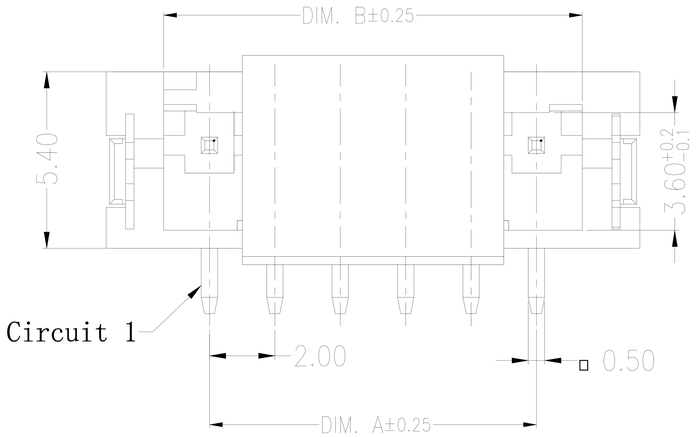

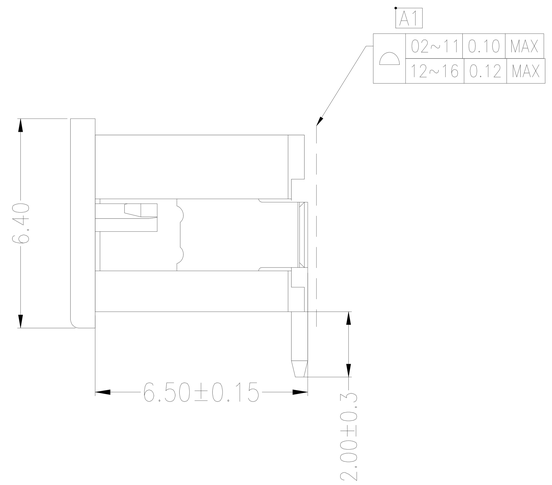

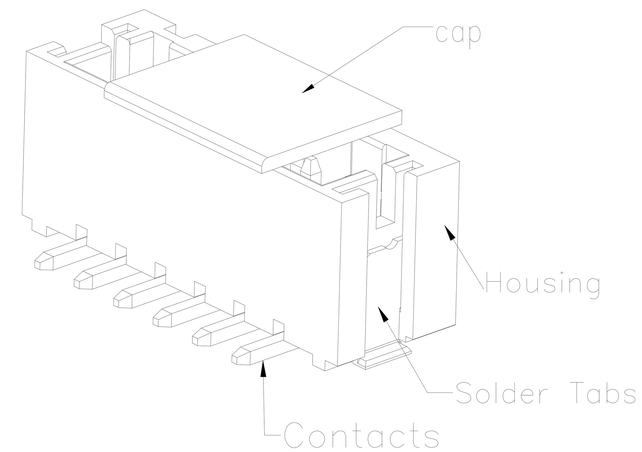

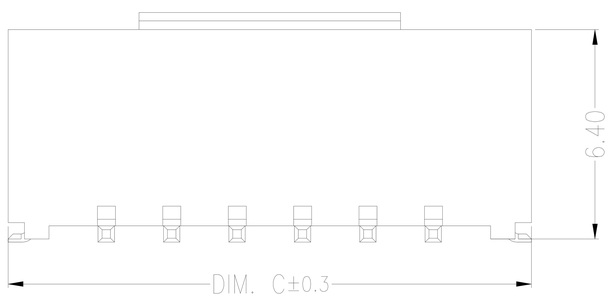

Specifications:
- Contact resistance:≤20mΩ
- Insulation resistance:≥1000MΩ
- Rated voltage:250V AC DC
- Rated current:2.0A AC DC
- Withstand Voltage: 1000V AC/minute
- Temperature Range:-25℃～ +105℃
- Housing:LCP/PA9T UL94V-0(Nature/Black)
- Cap:LCP UL94V-0,Nature
- Contacts:Brass/(Sn or Matte Sn or Gold)
- Solder Tabs:Phosphor Bronze/(Sn or Matte Sn)

Circuits	Dimensions(mm)		
	DIM. A	DIM. B	DIM. C
02	2.00	4.80	8.00
03	4.00	6.80	10.00
04	6.00	8.80	12.00
05	8.00	10.80	14.00
06	10.00	12.80	16.00
07	12.00	14.80	18.00
08	14.00	16.80	20.00
09	16.00	18.80	22.00
10	18.00	20.80	24.00
11	20.00	22.80	26.00
12	22.00	24.80	28.00
13	24.00	26.80	30.00
14	26.00	28.80	32.00
15	28.00	30.80	34.00
16	30.00	32.80	36.00

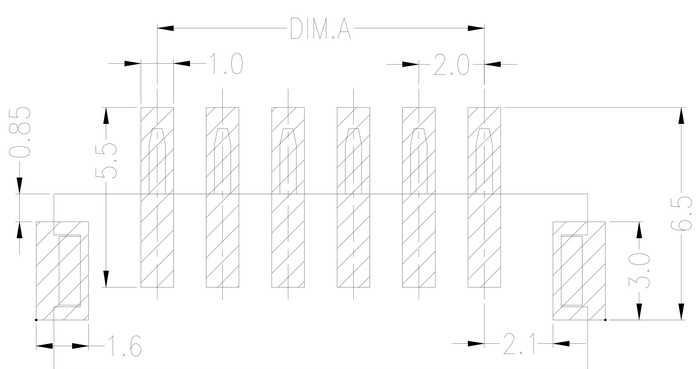

SUGGESTED PCB LAYOUT

紅焱電子有限公司

GENERAL TOLERANCE			
X.	±0.50	X.	±5°
X.X	±0.30	X.X	±2°
X.XX	±0.20	X.XX	±1°
		UNITS:	mm

USE: CUSTOMER
APPD: Shaojinghe
CHKD: Zenglingqing
DR: Jiangjianyin

TITLE: 2.0mmPITCH 180°WAFER SMT TYPE
PART NO.: A2001AWV-NP
DWG NO.:
SCALE 1 : 1
SHEET 1 / 1

REV	DESCRIPTION	DESIGN	DATE
A0	NEW RELEASE	Wudanping	2016/04/10
A1	Adjust flatness	Jiangjianyin	2020/06/18

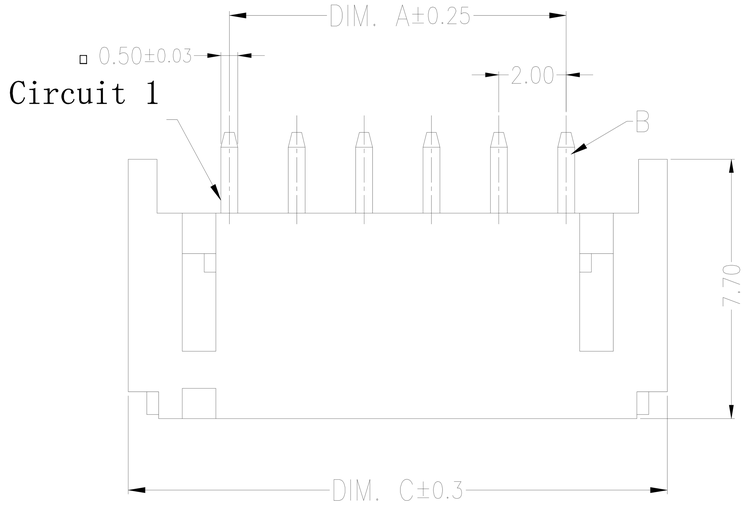

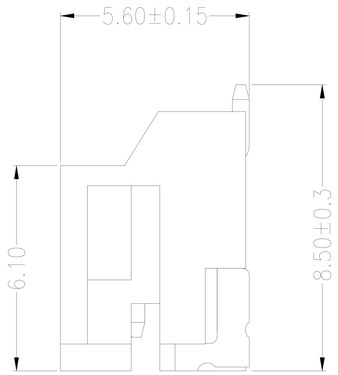

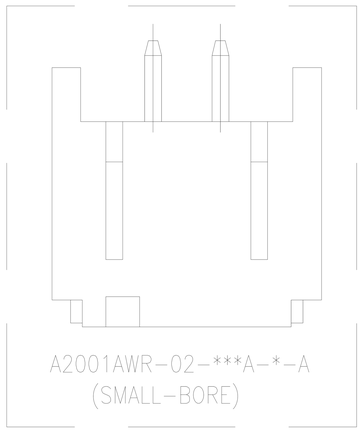

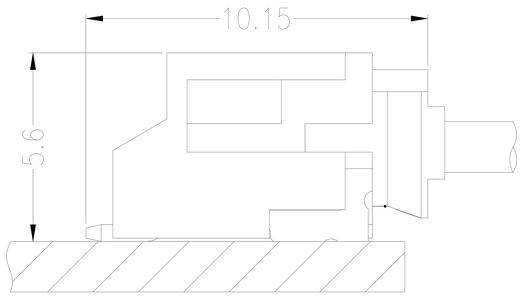

Assembly Layout

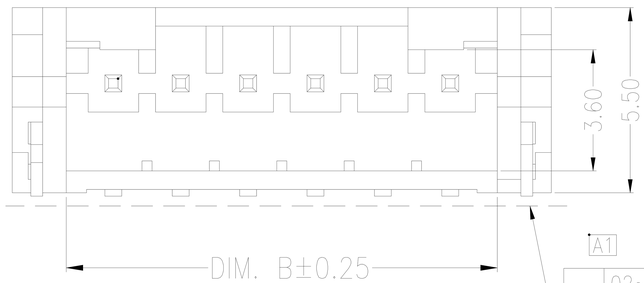

A1

02~11	0.10	MAX
12~16	0.12	MAX

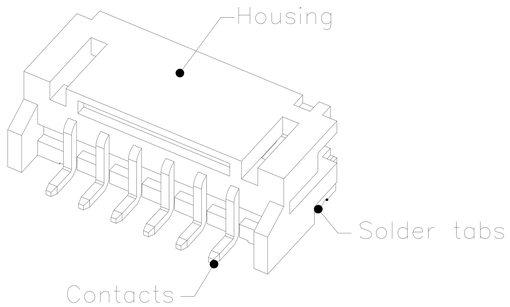

3D VIEWS

Specifications:
Contact resistance:≤20mΩ
Insulation resistance:⩾1000MΩ
Rated voltage:250V AC DC
Rated current:2.0A AC DC
Withstand voltage:1000V AC/minute
Temperature range:-25℃～ +105℃
Housing:LCP/PA9T,UL94V-0(Natural,Black,Red)
Contacts:Brass/Sn
Solder tabs:Brass/Sn

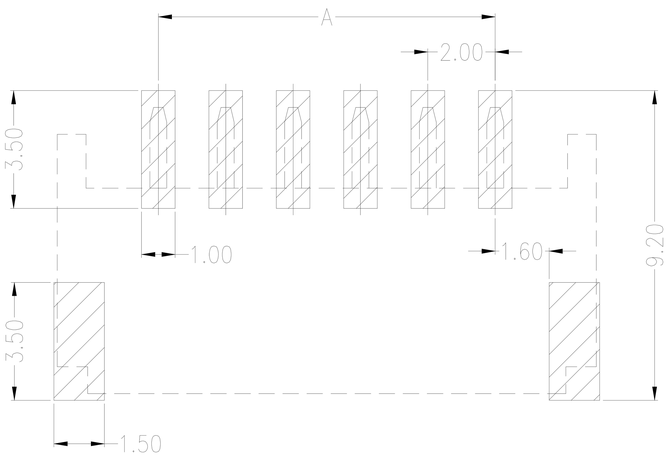

SUGGESTED PCB LAYOUT

Circuits	Dimensions(mm)		
	DIM.A	DIM.B	DIM.C
02	2.00	4.75	8.00
03	4.00	6.75	10.00
04	6.00	8.75	12.00
05	8.00	10.75	14.00
06	10.00	12.75	16.00
07	12.00	14.75	18.00
08	14.00	16.75	20.00
09	16.00	18.75	22.00
10	18.00	20.75	24.00
11	20.00	22.75	26.00
12	22.00	24.75	28.00
13	24.00	26.75	30.00
14	26.00	28.75	32.00
15	28.00	30.75	34.00
16	30.00	32.70	36.00

紅焱電子有限公司

GENERAL TOLERANCE			
X.	±0.50	X.	±5°
X.X	±0.30	X.X	±2°
X.XX	±0.20	X.XX	±1°
		UNITS:	mm

USE: CUSTOMER
APPD: Shaojinghe
CHKD: Zenglingqing
DR: Jiangjianyin

TITLE: 2.00mmPITCH 90°WAFER SMT TYPE
PART NO.: A2001AWR-NP
DWG NO.:
SCALE 1 : 1
SHEET 1 / 1