REV	DESCRIPTION	DESIGN	DATE
A0	NEW RELEASE	Lingqing	2020/07/22

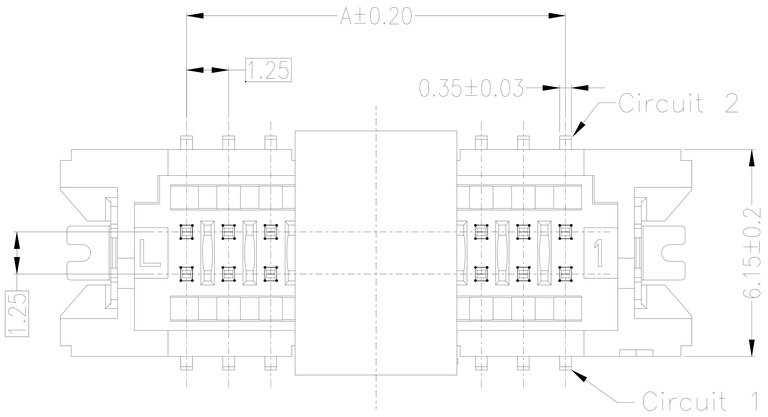

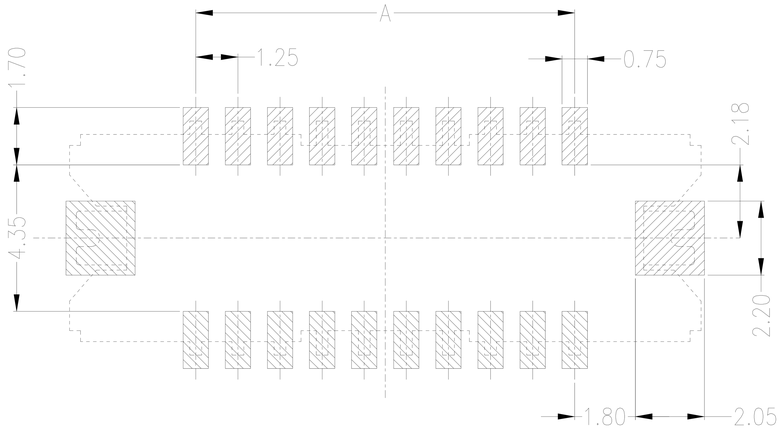

SUGGESTED PCB LAYOUT

Specifications:
Poles:10 to 50
Contact resistance:≤30mΩ
Insulation resistance:≥500MΩ
Rated voltage:150V AC DC
Rated current:1.0A AC DC
Withstand Voltage: 500V AC/minute
Temperature Range:-25°C~ +85°C
Housing:PA9T UL94V-0,Natural(Beige)
CAP:PA9T UL94V-0,Natural(Beige)
Contacts:Brass/Sn-plated or Gold-flash
Solder Tabs:Brass/Sn-plated or Gold-flash

Circuits	Dimensions(mm)		
	A	B	C
2x05P	5.00	12.50	6.10
2x10P	11.25	18.75	12.35
2x15P	17.50	25.00	18.60
2x20P	23.75	31.25	24.85
2x25P	30.00	37.50	31.10

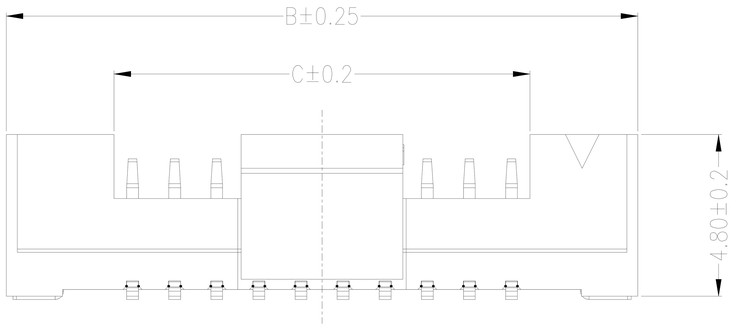

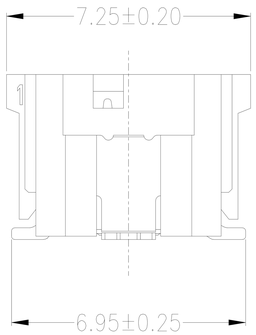

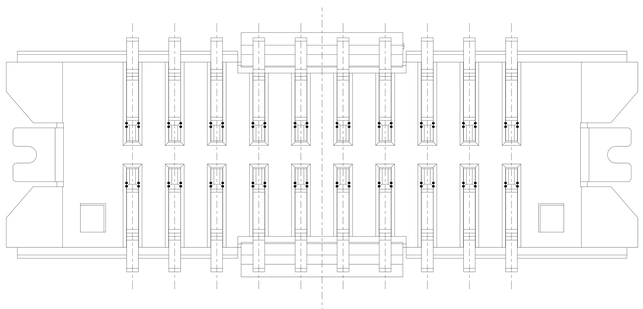

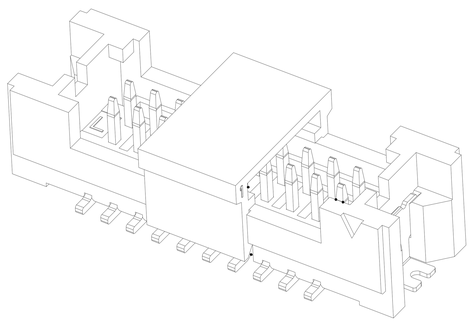

紅焱電子有限公司			TITLE: 1.25 Pitch Wafer 180° SMT	
GENERAL TOLERANCE		USE: CUSTOMER	PART NO.: A1258AWV-2XNP	
X. ±0.50	X. ±5°	APPD: WangFeng	DWG NO.:	
X.X ±0.30	X.X ±2°	CHKD: Shaojinghe		
X.XX ±0.20	X.XX ±1°	DR: Zenglingqing	SCALE 1 : 1	SHEET 1 / 1
	UNITS: mm			

REV	DESCRIPTION	DESIGN	DATE
A0	NEW RELEASE	Lingqing	2020/07/22

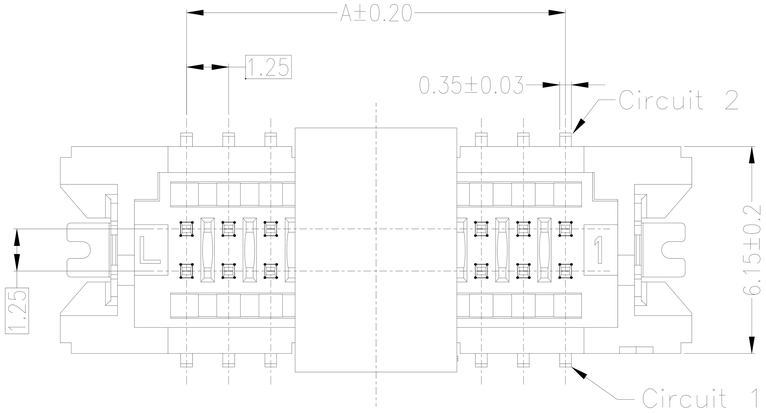

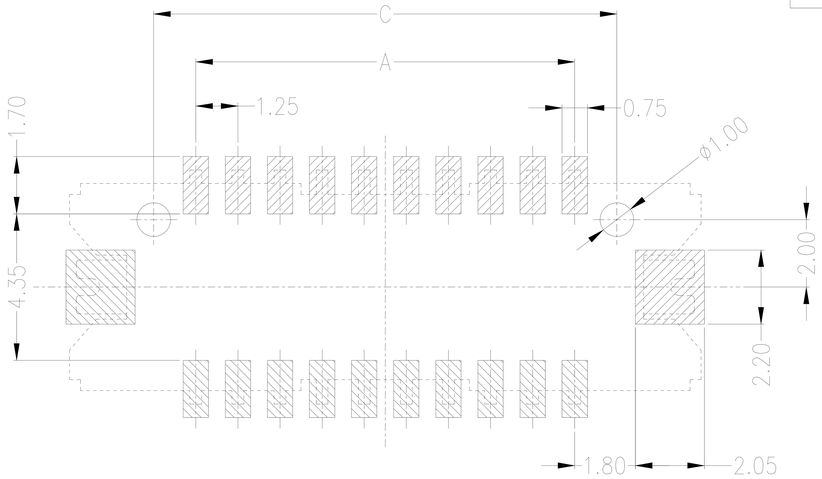

SUGGESTED PCB LAYOUT

Specifications:
- Poles:10 to 50
- Contact resistance:≤30mΩ
- Insulation resistance:≥500MΩ
- Rated voltage:150V AC DC
- Rated current:1.0A AC DC
- Withstand Voltage: 500V AC/minute
- Temperature Range:-25°C～ +85°C
- Housing:PA9T UL94V-0,Natural(Beige)
- CAP:PA9T UL94V-0,Natural(Beige)
- Contacts:Brass/Sn-plated or Gold-flash
- Solder Tabs:Brass/Sn-plated or Gold-flash

Circuits	Dimensions(mm)			
	A	B	C	D
2x05P	5.00	12.50	6.10	7.50
2x10P	11.25	18.75	12.35	13.75
2x15P	17.50	25.00	18.60	20.00
2x20P	23.75	31.25	24.85	26.25
2x25P	30.00	37.50	31.10	32.50

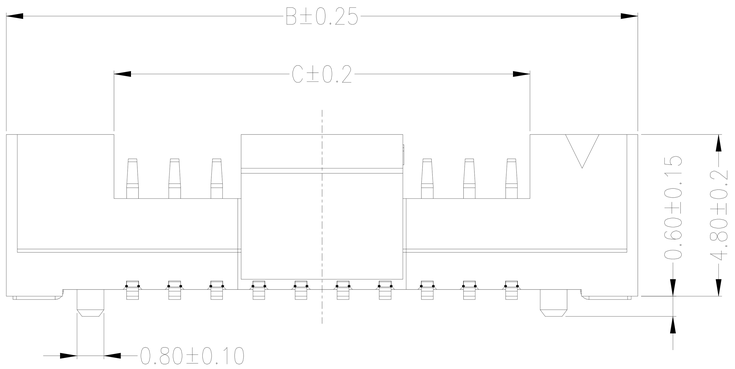

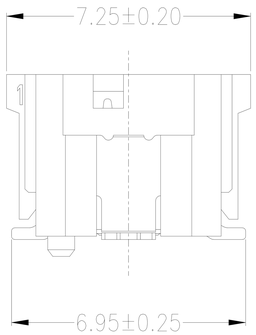

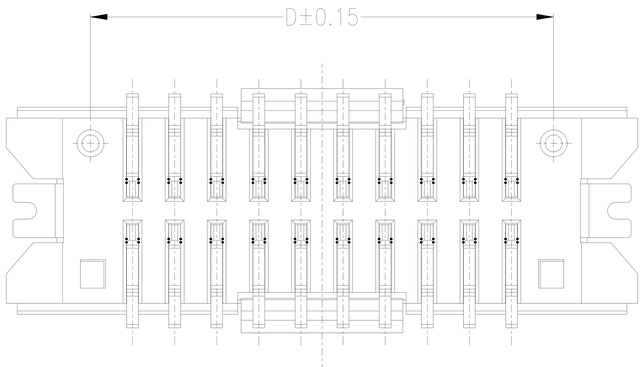

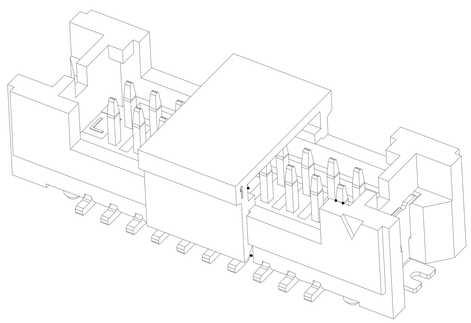

紅焱電子有限公司

GENERAL TOLERANCE		USE: CUSTOMER	TITLE: 1.25 Pitch Wafer 180° SMT
X. ±0.50	X. ±5°	APPD: WangFeng	PART NO.: A1258AWVB-2XNP
X.X ±0.30	X.X ±2°	CHKD: Shaojinghe	DWG NO.:
X.XX ±0.20	X.XX ±1°	DR: Zenglingqing	SCALE 1 : 1 / SHEET 1 / 1
	UNITS: mm		