REV	DESCRIPTION	DESIGN	DATE
A0	NEW RELEASE	FangSongLe	2019/06/22

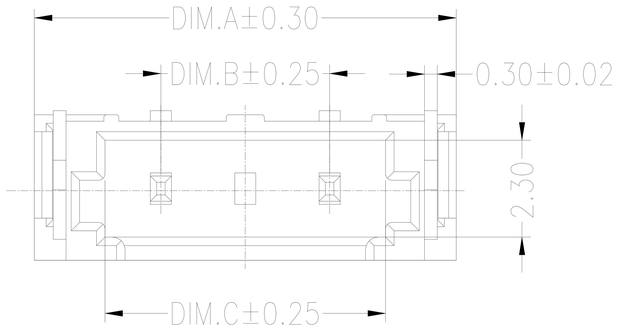

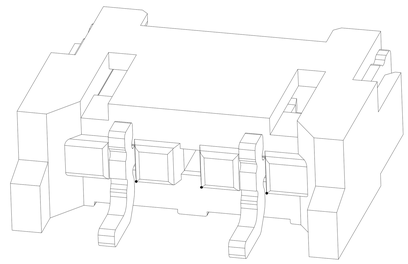

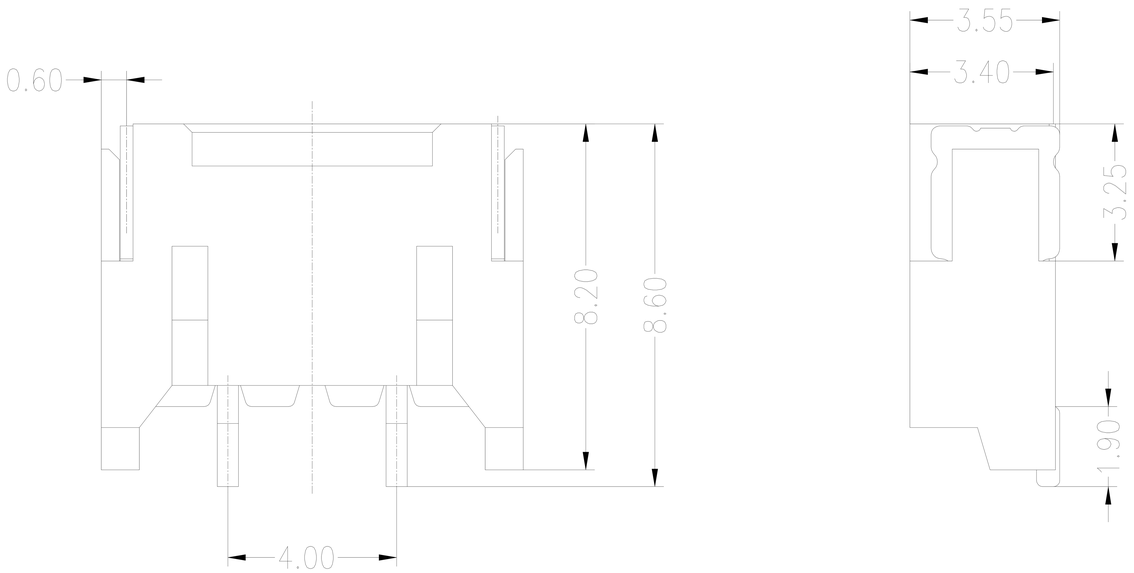

Specifications:

Poles:02~04P
Contact resistance:≤10mΩ
Insulation resistance:≥1000MΩ
Rated voltage:600V AC DC
Rated current:1.0A AC DC
Withstand Voltage: 1800V AC/minute
Temperature Range:-25℃~ +85℃
Housing:PA9T UL94V-0,Natural
Contacts:Brass/Sn-plated
Solder Tabs:Brass/Sn-plated

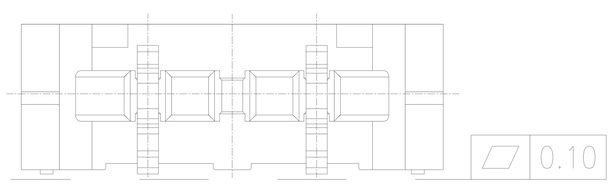

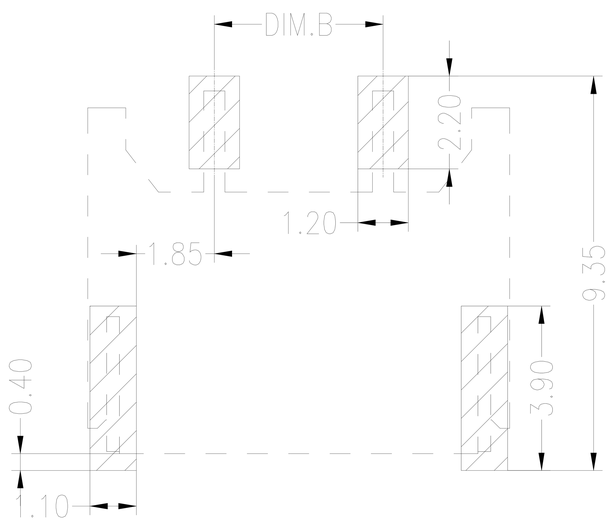

PCB LAYOUT(Tolerance:±0.05)

PIN	DIM A	DIM B	DIM C
2	10.00	4.00	6.65
3	14.00	8.00	10.65
4	18.00	12.00	14.65

紅焱電子有限公司

GENERAL TOLERANCE			
X.	±0.50	X.	±5°
X.X	±0.30	X.X	±2°
X.XX	±0.20	X.XX	±1°
		UNITS:	mm

USE: CUSTOMER
APPD: Steven
CHKD: Liuzhengling
DR: FangSongLe

TITLE: 4.0 Pitch Wafer 90° SMT
PART NO.: A4001AWR-NP
DWG NO.:
SCALE 1 : 1
SHEET 1 / 1

REV	DESIGN	DATE
A0	蒋建银	2018.01.17
—	—	—

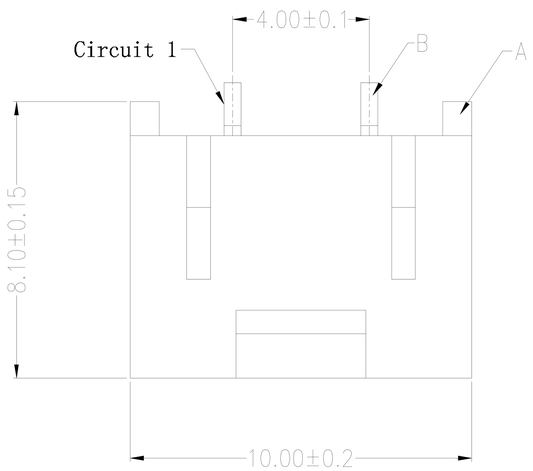

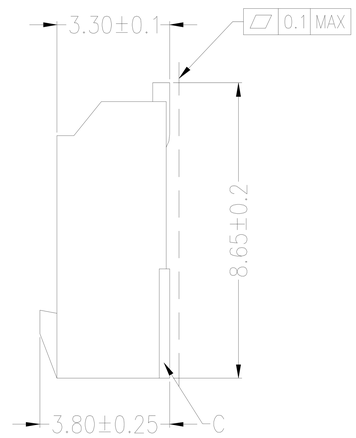

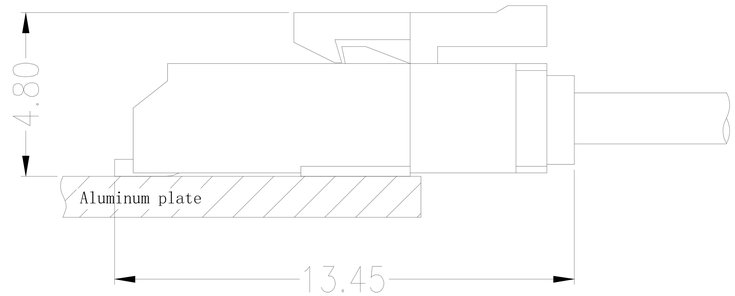

Assembly Layout

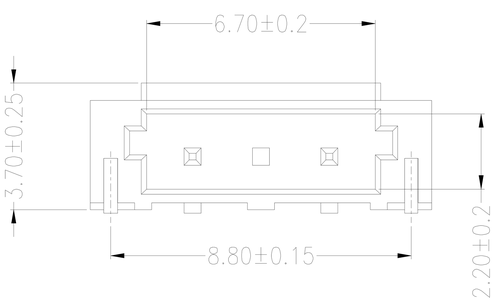

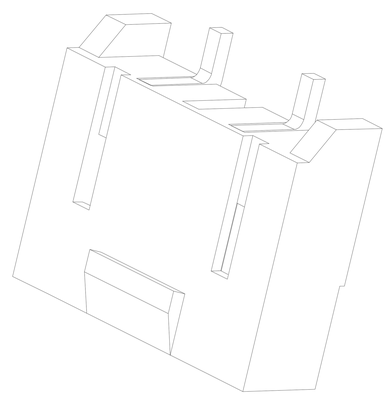

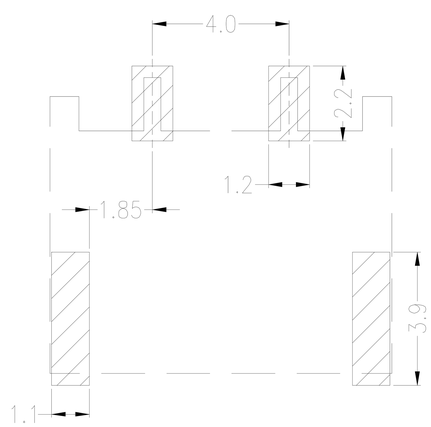

Board Layout

主要技术参数 Main Specifications

线数 (Poles): 02 to 05
额定电阻 (Contact resistance):≤20mΩ
绝缘电阻 (Insulation resistance):≥1000MΩ
额定电压 (Rated voltage):600V AC DC
额定电流 (Rated current):1A AC DC
耐电压 (Withstand Voltage): 1800V AC/minute
温度范围 (Temperature Range) :-25℃～ +105℃

ITEM	COMPONENT		Q'TY	MATERIAL	FINISH
C	SOLDER TAB		2 PCS	BRASS	Sn-plated
B	CONTACT		2 PCS	BRASS	Sn-plated
A	PEDESTAL		1 PCS	LCP	UL 94V-0, COLOR:BEIGE

紅焱電子有限公司

TITLE: —
4.0mmPITCH 90°WAFER SMT TYPE

X.±0.5	X.±5°	USE: CUSTOMER	PART NO.: A4002AWR-2P
.X±0.3	.X±2°	APPD: 王亮	DWG NO.:
.XX±0.25	.XX±1°	CHKD: 曾令青	
--	--	DR: 蒋建银	SCALE 1 : 1 / SHEET 1 / 1
	UNITS: mm		