REV	DESCRIPTION	DESIGN	DATE
A0	NEW RELEASE	Wudanping	2017/07/28

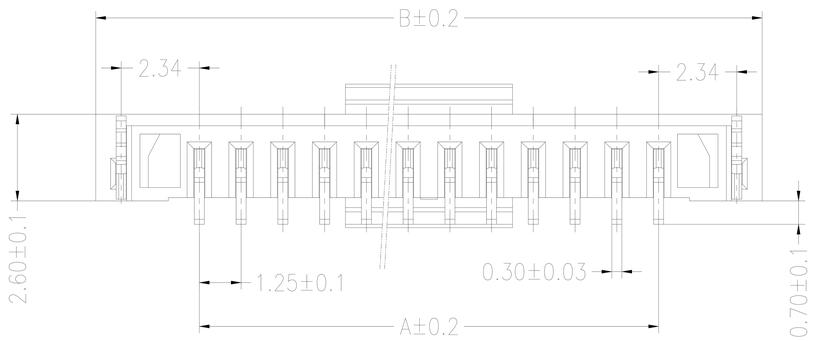

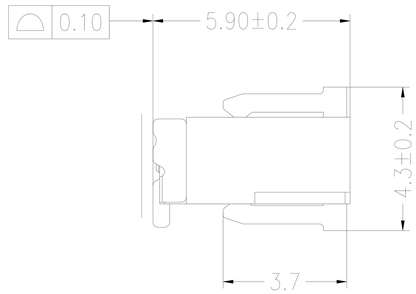

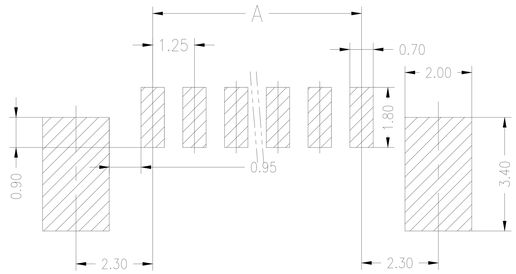

SUGGESTED PCB LAYOUT

孔位	DIM A	DIM B	DIM C	DIM D	DIM E
2pin	1.25	7.45	3.05	2.50	2.90
3pin	2.50	8.70	4.30	3.00	
4pin	3.75	9.95	5.55	3.75	5.00
5pin	5.00	11.20	6.80	5.00	
6pin	6.25	12.45	8.05	6.25	
7pin	7.50	13.70	9.30		
8pin	8.75	14.95	10.55		
9pin	10.00	16.20	11.80		
10pin	11.25	17.45	13.05		
11pin	12.50	18.70	14.30		
12pin	13.75	19.95	15.55		
13pin	15.00	21.20	16.80		
14pin	16.25	22.45	18.05		
15pin	17.50	23.70	19.30		
*16pin	18.75	24.95	20.55		
*17pin	20.00	26.20	21.80		
*18pin	21.25	27.45	23.05		
*19pin	22.50	28.70	24.30		
*20pin	23.75	29.95	25.55		
*21pin	25.00	31.20	26.80		
*22pin	26.25	32.45	28.05		
*23pin	27.50	33.70	29.30		
*24pin	28.75	34.95	30.55		
*25pin	30.00	36.20	31.80		
*26pin	31.25	37.45	33.05		
*27pin	32.50	38.70	34.30		
*28pin	33.75	39.95	35.55		
*29pin	35.00	41.20	36.80		
30pin	36.25	42.45	38.05		

Specifications:

Contact resistance:≤20mΩ
Insulation resistance:⩾500MΩ
Rated voltage:150V AC DC
Rated current:1.0A AC DC
Withstand voltage:500V AC/minute
Temperature range:-25℃～ +85℃
Housing:LCP UL94V-0,Natural
CAP:LCP UL94V-0,Natural
Contacts:Phosphor bronze/Matte sn
Solder tabs:Phosphor bronze/Matte sn

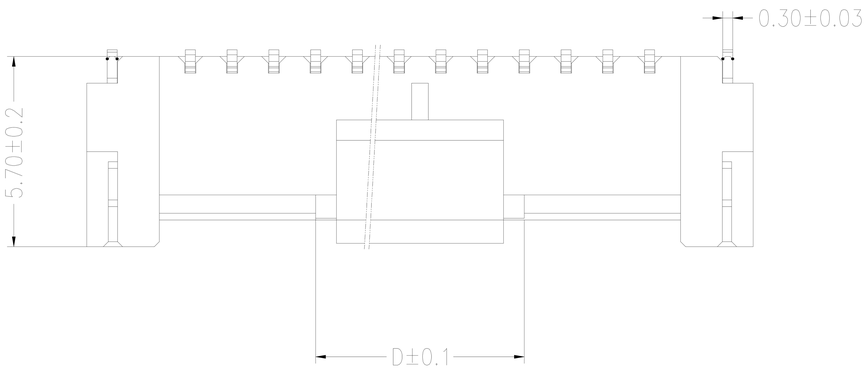

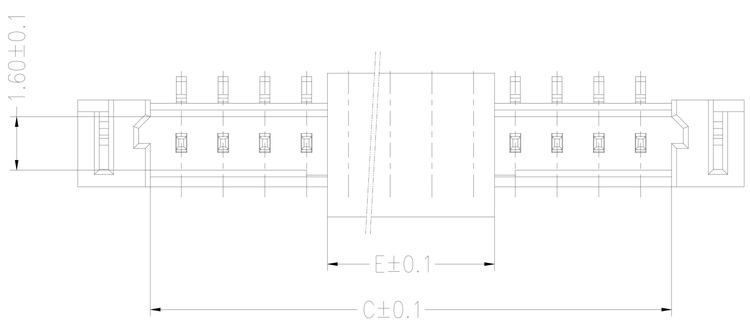

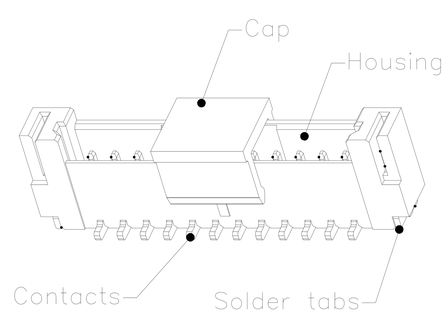

3D VIEWS

紅焱電子有限公司

GENERAL TOLERANCE			
X.	±0.50	X.	±5°
X.X	±0.30	X.X	±2°
X.XX	±0.20	X.XX	±1°
		UNITS:	mm

USE: CUSTOMER
APPD: Shaojinghe
CHKD: Zenglingqing
DR: Jiangjianyin

TITLE: 1.25mmPITCH 180°WAFER SMT TYPE
PART NO.: A1255AWV-NP
DWG NO.:
SCALE 1 : 1
SHEET 1 / 1

REV	DESCRIPTION	DESIGN	DATE
A0	NEW RELEASE	Wudanping	2017/07/28

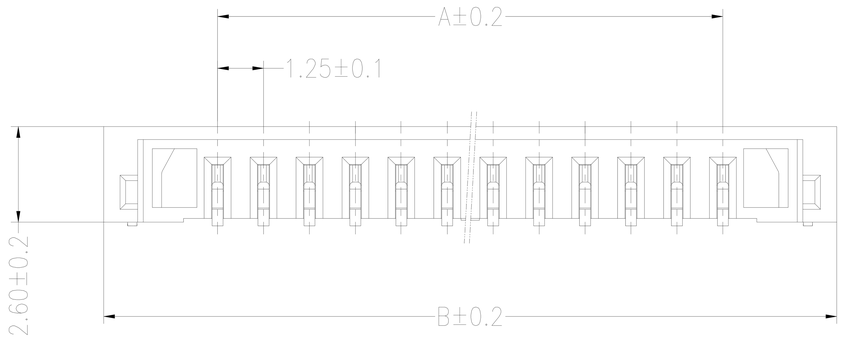

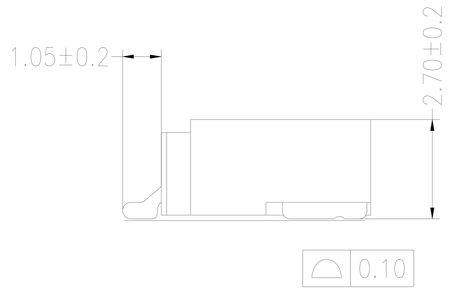

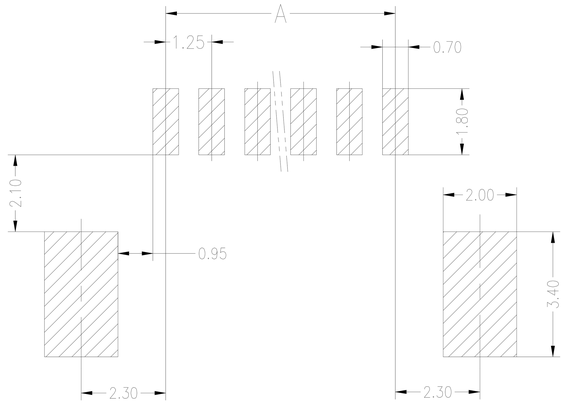

SUGGESTED PCB LAYOUT

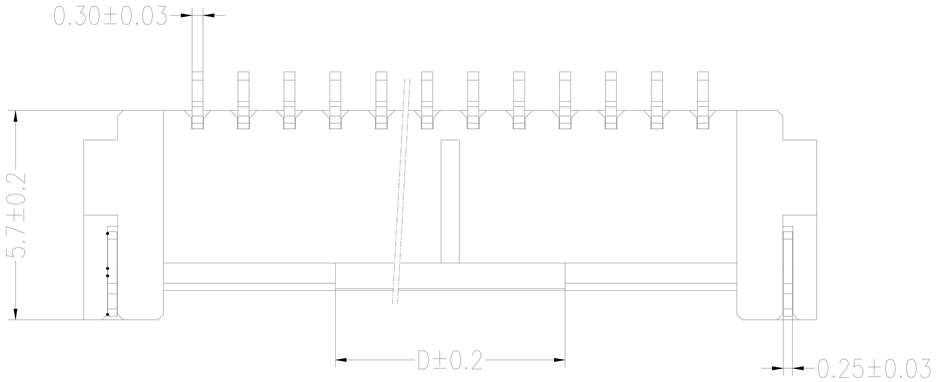

Specifications:

Contact resistance:≤20mΩ
Insulation resistance:≥500MΩ
Rated voltage:150V AC DC
Rated current:1.0A AC DC
Withstand voltage:500V AC/minute
Temperature range:-25℃～ +85℃
Housing:LCP UL94V-0,Natural
Contacts:Phosphor bronze/Matte sn
Solder tabs:Phosphor bronze/Matte sn

孔位	DIM A	DIM B	DIM C	DIM D
2pin	1.25	7.45	3.05	2.50
3pin	2.50	8.70	4.30	3.00
4pin	3.75	9.95	5.55	3.75
5pin	5.00	11.20	6.80	5.00
6pin	6.25	12.45	8.05	
7pin	7.50	13.70	9.30	
8pin	8.75	14.95	10.55	
9pin	10.00	16.20	11.80	
10pin	11.25	17.45	13.05	
11pin	12.50	18.70	14.30	
12pin	13.75	19.95	15.55	
13pin	15.00	21.20	16.80	
14pin	16.25	22.45	18.05	
15pin	17.50	23.70	19.30	
*16pin	18.75	24.95	20.55	
*17pin	20.00	26.20	21.80	
*18pin	21.25	27.45	23.05	6.25
*19pin	22.50	28.70	24.30	
*20pin	23.75	29.95	25.55	
*21pin	25.00	31.20	26.80	
*22pin	26.25	32.45	28.05	
*23pin	27.50	33.70	29.30	
*24pin	28.75	34.95	30.55	
*25pin	30.00	36.20	31.80	
*26pin	31.25	37.45	33.05	
*27pin	32.50	38.70	34.30	
*28pin	33.75	39.95	35.55	
*29pin	35.00	41.20	36.80	
30pin	36.25	42.45	38.05	

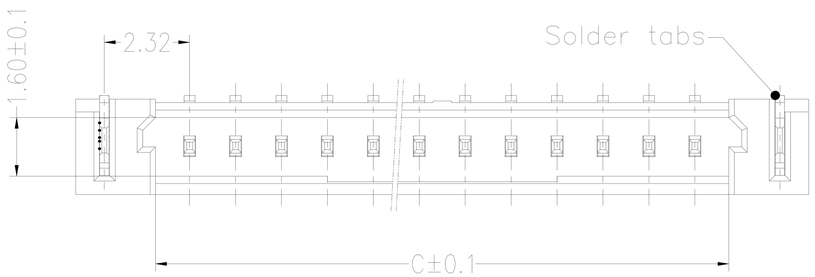

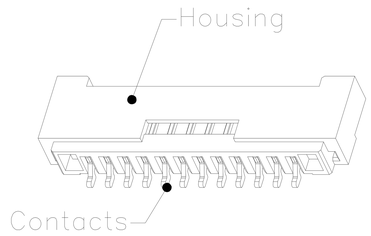

3D VIEWS

紅焱電子有限公司			TITLE: 1.25mmPITCH 90°WAFER SMT TYPE	
GENERAL TOLERANCE		USE: CUSTOMER	PART NO.: A1255AWR-NP	
X. ±0.50	X. ±5°	APPD: Shaojinghe	DWG NO.:	
X.X ±0.30	X.X ±2°	CHKD: Zenglingqing		
X.XX ±0.20	X.XX ±1°	DR: Jiangjianyin	SCALE 1 : 1	SHEET 1 / 1
	UNITS: mm			