REV	DESCRIPTION	DESIGN	DATE
A	NEW RELEASE	Lingqing	2021/03/17

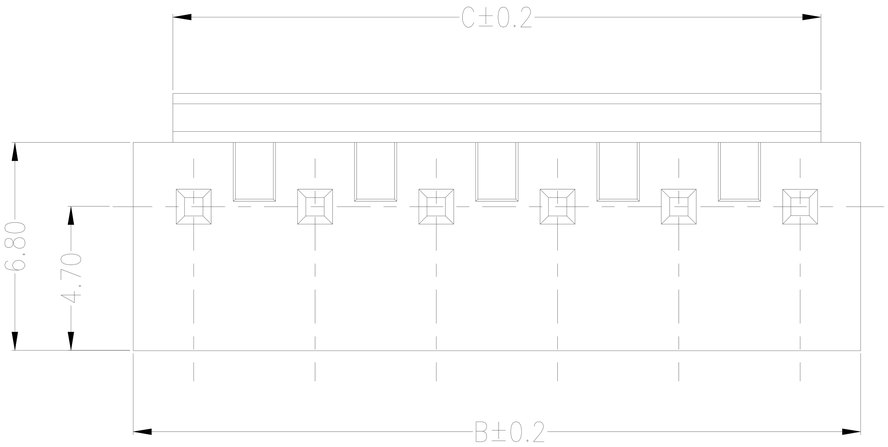

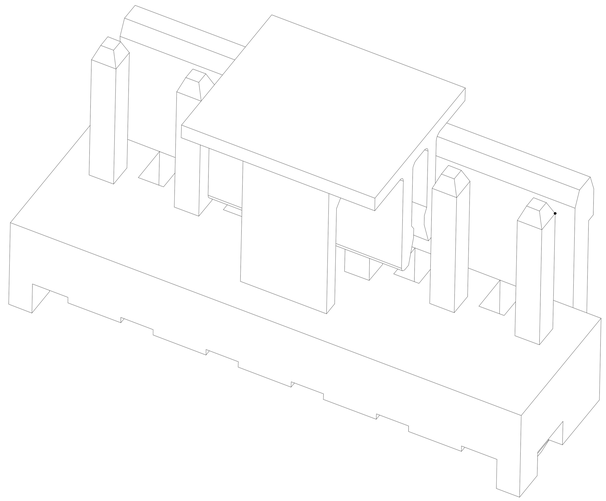

Specifications:

Contact resistance:≤20mΩ
Insulation resistance:≥1000MΩ
Rated voltage:250V AC DC
Rated current:7.0A AC DC
Withstand Voltage: 1000V AC/minute
Temperature Range:-40°C～ +105°C
Housing:LCP UL94V-0,Natural
CAP:LCP UL94V-0,Natural
Contacts:Brass Sn-plated

Circuits	Dimensions(mm)		
	A	B	C
02	3.96	7.92	5.32
03	7.92	11.88	9.28
04	11.88	15.84	13.24
05	15.84	19.80	17.20
06	19.80	23.76	21.16
07	23.76	27.72	25.12
08	27.72	31.68	29.08

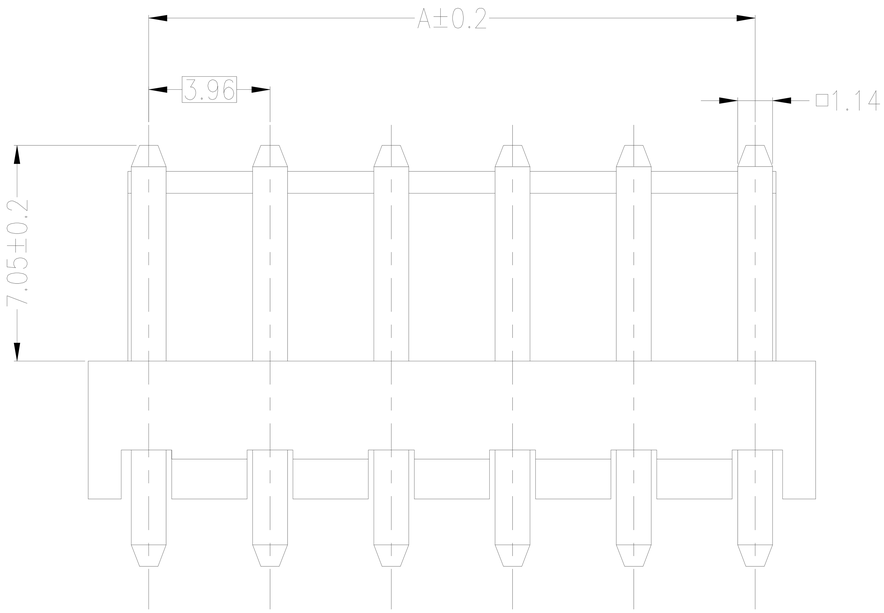

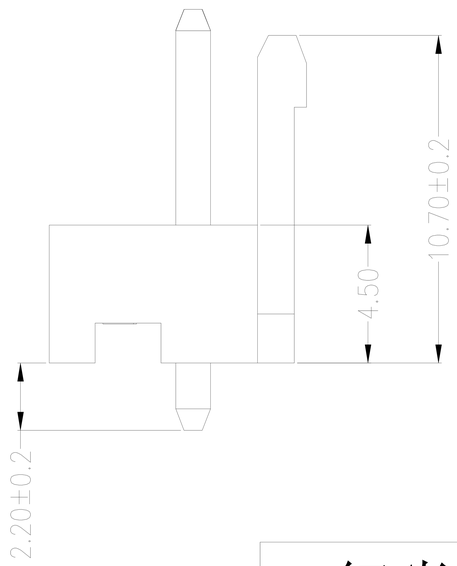

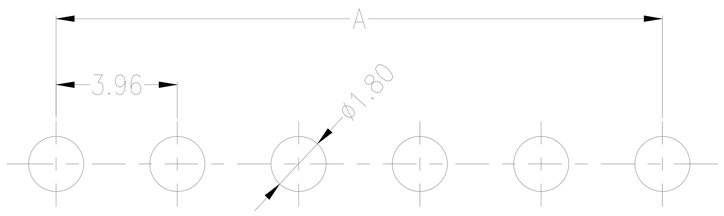

RECOMMENGED PCB LAYOUT(TOP VIEW)
TOLERANCE:±0.05mm

紅焱電子有限公司

GENERAL TOLERANCE			
X.	±0.50	X.	±5°
X.X	±0.30	X.X	±2°
X.XX	±0.20	X.XX	±1°
		UNITS:	mm

USE: CUSTOMER
APPD: Shaojinghe
CHKD: Fangsongle
DR: Zenglingqing

TITLE: 3.96 Pitch Wafer 180° DIP
PART NO.: T3966A-NP
DWG NO.:
SCALE 1 : 1
SHEET 1 / 1

REV	DESCRIPTION	DESIGN	DATE
A	NEW RELEASE	Lingqing	2021/03/17

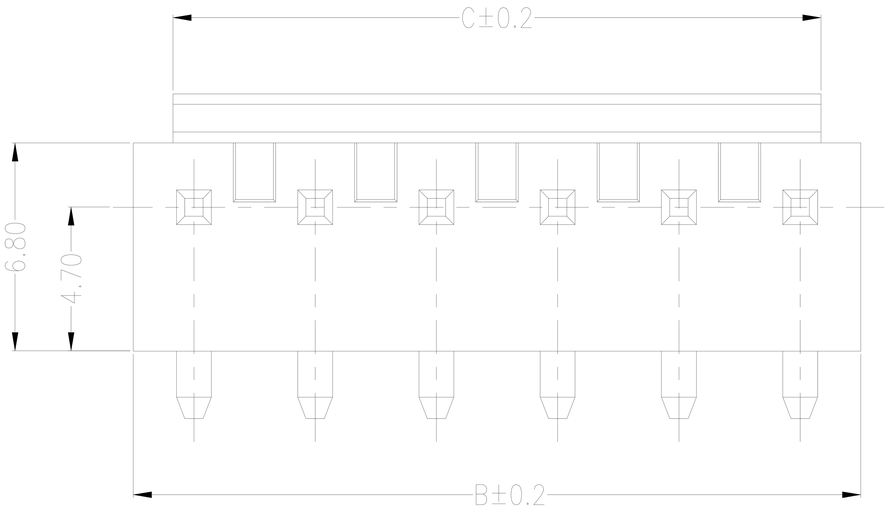

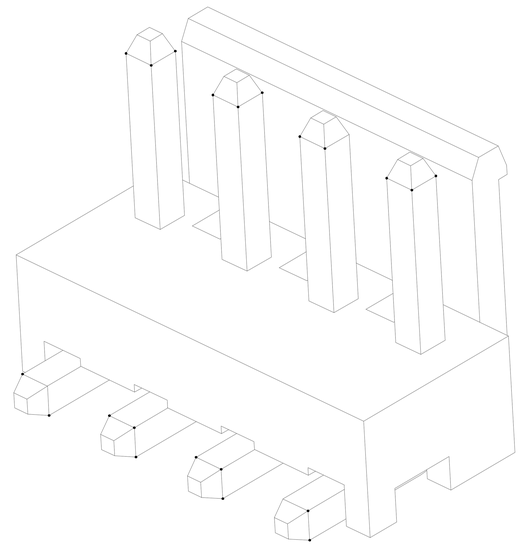

Specifications:

Contact resistance:≤20mΩ
Insulation resistance:≥1000MΩ
Rated voltage:250V AC DC
Rated current: 7.0A AC DC
Withstand Voltage: 1000V AC/minute
Temperature Range:-40°C～ +105°C
Housing:LCP UL94V-0,Natural
Contacts:Brass /Sn

Circuits	Dimensions(mm)		
	A	B	C
02	3.96	7.92	5.32
03	7.92	11.88	9.28
04	11.88	15.84	13.24
05	15.84	19.80	17.20
06	19.80	23.76	21.16
07	23.76	27.72	25.12
08	27.72	31.68	29.08

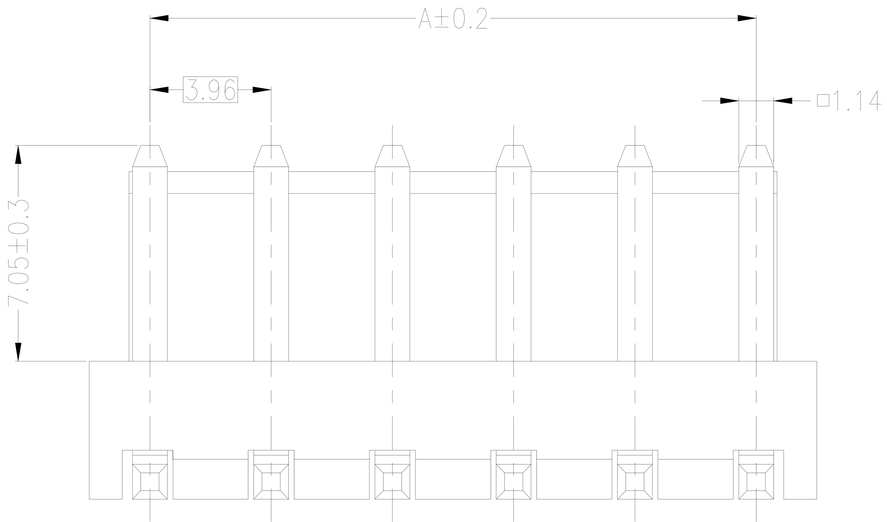

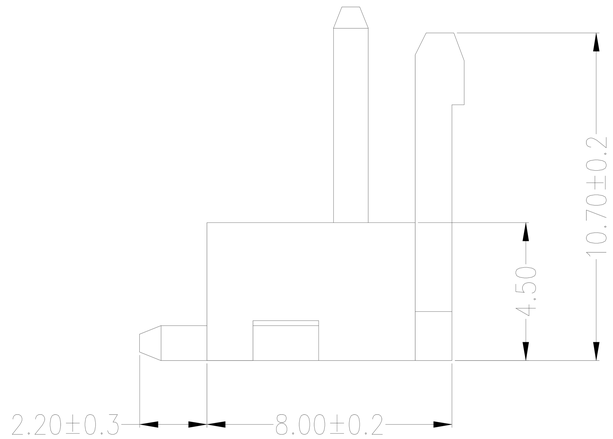

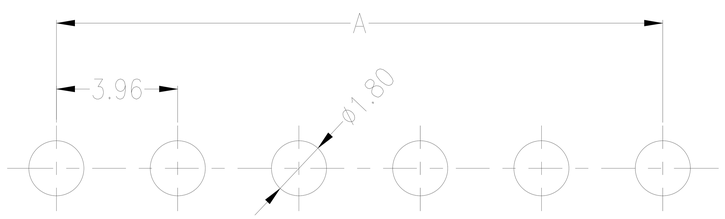

RECOMMENGED PCB LAYOUT(TOP VIEW)
TOLERANCE:±0.05mm

紅焱電子有限公司			TITLE: 3.96 Pitch Wafer 180° DIP	
GENERAL TOLERANCE		USE: CUSTOMER	PART NO.: T3966AW-NP	
X. ±0.50	X. ±5°	APPD: Shaojinghe	DWG NO.:	
X.X ±0.30	X.X ±2°	CHKD: Fangsongle		
X.XX ±0.20	X.XX ±1°	DR: Zenglingqing	SCALE 1 : 1	SHEET 1 / 1
	UNITS: mm			